PROJECT:
PROPOSED NEW 1 UNIT STANDARD DESIGN OF FARM LABOUR QUARTERS, BRUNEI DARUSSALAM
(FOR 5 PERSONS) - OPTION 1

CLIENT:
DEPARTMENT OF AGRICULTURE AND AGRIFOOD, BRUNEI DARUSSALAM

ADDRESS:
N/A

DRAWING NOTES

1. The following designs were developed up to Working Drawing (with pre-approval from ABCi for building design/TBC) - and are considered as sufficient for Authority Submission.
2. No sites were allocated for the units at this stage. Therefore, once a site is allocated, Applicant(s) will need to appoint Qualified Person(s) to include the additional drawing information.
3. These changes and/or additional information will need to be included in the relevant drawings as per required by the Authority.
4. These changes and/or additional information will be subjected to the approval of Client, Department of Agriculture and Agrifood, Brunei Darussalam.
5. All development applications for the units will require a Qualified Person(s) to be appointed for the process of applying for:
   - Planning Approval (including Infrastructure Submission –applicable for 1 unit development)
   - Building Approval
   - Permit to Start Construction
   - Occupational Permit

ABBREVIATIONS

RL	Roofline	AW	Aluminum Awning Window
DP	Downpipe	LV	Aluminum Louvre Window
FT	Floor Trap	FG	Fixed Glass
GT	Gully Trap	SHR	Shower
MH	Manhole	NTS	Not to Scale
FFL	Final Floor Level	APPROX	Approximate
CL	Ceiling Level	AVG	Average
T.B.C	To Be Confirmed	R.C	Reinforced concrete
NGL	Natural Ground Level	EXT	Existing
OHC	Overhead Cupboard	QTY	Quantity
WMS	Washing Machine Space	RM	Room
W.I.R	Walk-in-Robe	BDRM	Bedroom
SGD	Sliding Glass Door	SPEC	Specification
SW	Aluminum Sliding Window	TYP	Typical
DH	Aluminum Double Hung Window		

SYMBOLS

D1 — DOOR TAG

W1 — WINDOW TAG

ROOM NAME 10 m² — ROOM TAG

A — GRID MARKER

SECTION A — SECTION MARKER

KIBLAT N — NORTH POINT & KIBLAT

GRAPHICAL SCALE BAR

1:200 @ A3

0 4 10 20 m

1:100 @ A3

0 2 5 10 m

Printed:	3/9/2022 10:10:42 AM
Paper size:	A3-LV
Project Status	Schematic Design
Project Date	18/08/2022

Notes

No	Description	Date

KHA Arkitek
P.O Box 272
MPC,
Old Airport,
Berakas
BB3122

Contact No: 2610380

Architect's Signature

Khalid Haji Sirat
Registeration No: 00414/R

Client Name and Approved by:

Department of Agriculture and Agrifood, BD

Project Name And Address

PROPOSED NEW 1 UNIT STANDARD DESIGN OF FARM LABOUR QUARTERS, BRUNEI DARUSSALAM (FOR 5 PERSONS) - OPTION 1

Drawing Name

COVER PAGE & DRAWING NOTES

Designed By	KHS
Drawn By	KHS/SHA
Checked By	AQI
Scale	1 : 20
Date	08/31/22

Project No	Sheet No	Rev.
PR120	1	

DRAWING LIST

No.	Sheet Number	Sheet Name	Sheet Issue Date	Sheet Scale
1	1	COVER PAGE & DRAWING NOTES	08/31/22	NTS
2	A1	DRAWING LIST & SITE DEVELOPMENT PLAN	08/16/22	As indicated
3	B1	GROUND FLOOR & ROOF PLAN	08/16/22	1 : 100
4	C1	GROUND FLOOR CEILING PLAN	08/22/22	1 : 100
5	D1	ELEVATIONS	08/16/22	1 : 100
6	E1	SECTION A & B	08/16/22	1 : 100
7	F1	WINDOW SCHEDULE	08/25/22	1 : 50
8	F2	DOOR SCHEDULE & IRONMONGERIES SCHEDULE	08/29/22	1 : 50
9	F3	VENTILATION & MATERIAL, SANITARYWARE & FITTINGS SCHEDULE	08/26/22	As indicated
10	G1	TB & WC DETAILS	08/26/22	1 : 50
11	G2	KITCHEN & SHOE WASHING AREA DETAILS	08/30/22	As indicated
12	G3	DOOR JAMB, TYPICAL DPC, GUTTER AND SURFACE DRAIN DETAILS	08/30/22	As indicated
13	K1	GROUND FLOOR ELECTRICAL LAYOUT PLAN	09/02/22	1 : 100
14	P1	ROOM PLANS & FURNITURE SCHEDULE	08/27/22	As indicated

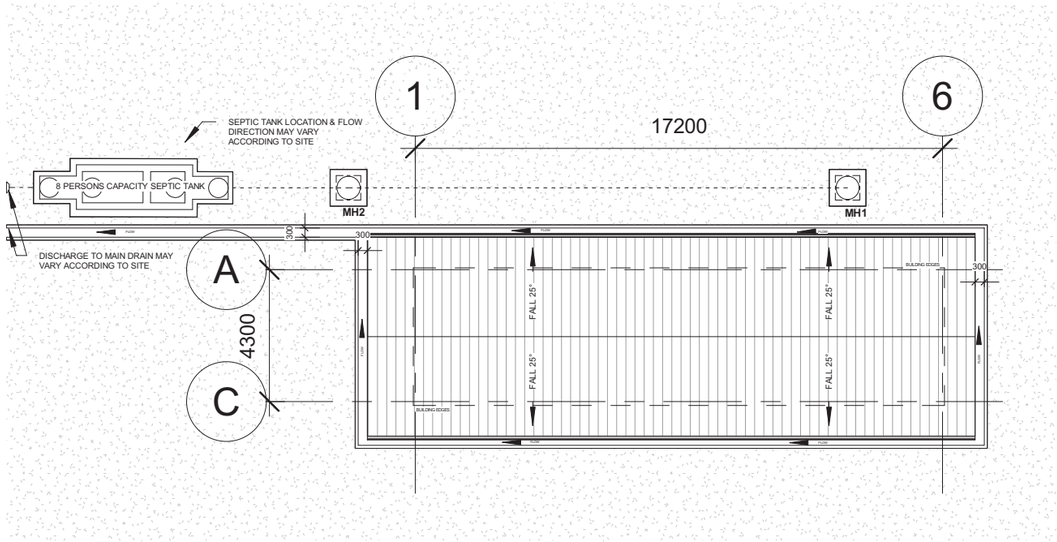

SITE DEVELOPMENT

SCALE 1:200

1:200 @ A3

0 4 10 20 m

Printed:	9/23/2022 2:34:37 PM
Paper size:	A3-LV
Project Status	Schematic Design
Project Date	18/08/2022

Notes

No	Description	Date

KHA Arkitek
P.O Box 272
MPC,
Old Airport,
Berakas
BB3122

Contact No: 2610380

Architect's Signature

Khalid Haji Sirat

Registeration No: 0041/Ar

Client Name and Approved by:

Department of Agriculture and Agrifood, BD

Project Name And Address

PROPOSED NEW 1 UNIT STANDARD DESIGN OF FARM LABOUR QUARTERS, BRUNEI DARUSSALAM (FOR 5 PERSONS) - OPTION 1

Drawing Name

DRAWING LIST & SITE DEVELOPMENT PLAN

Designed By	KHS
Drawn By	KHS/SHA
Checked By	AQI
Scale	1 : 200
Date	08/16/22

Project No	Sheet No	Rev.
PR120	A1	

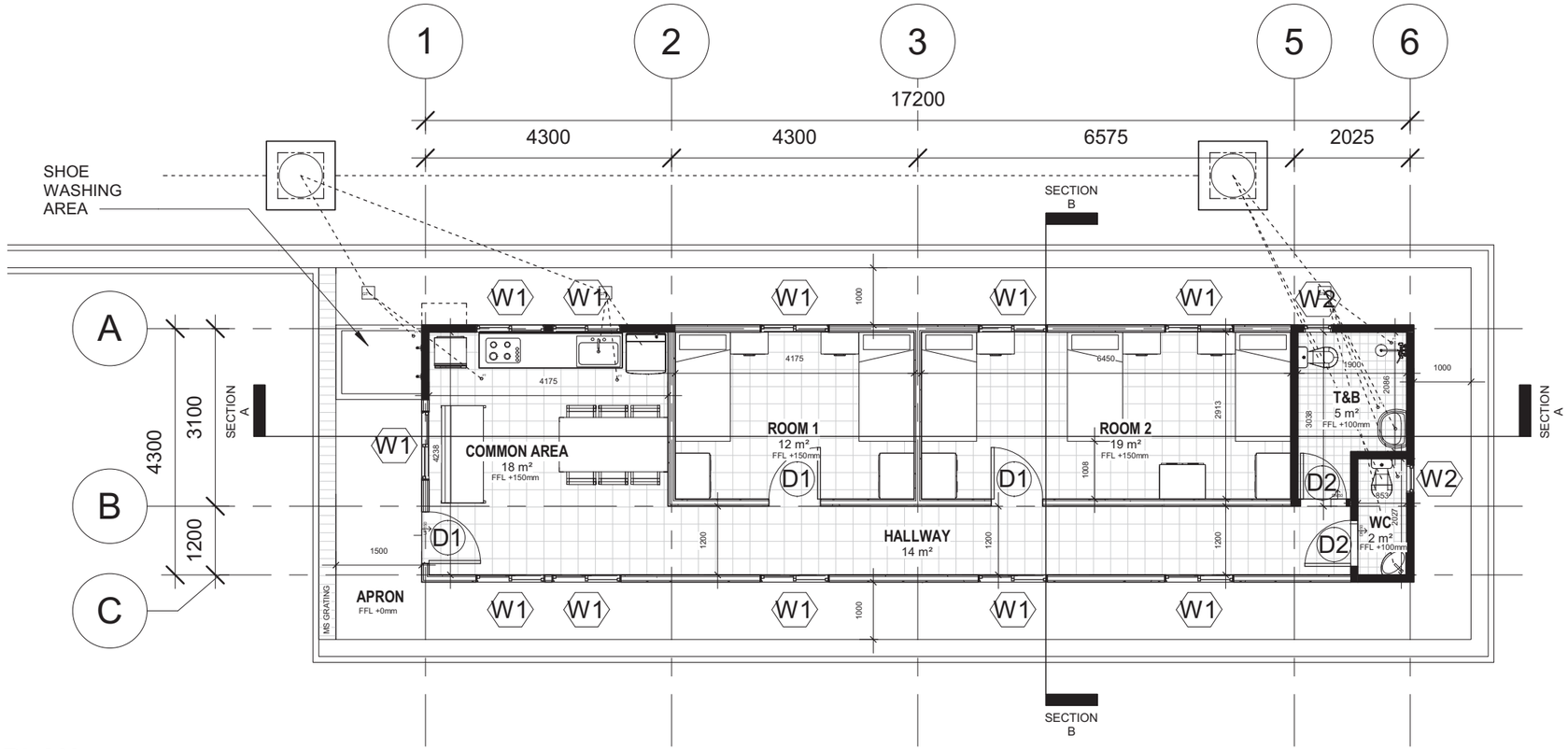

GROUND FLOOR PLAN
SCALE 1:100

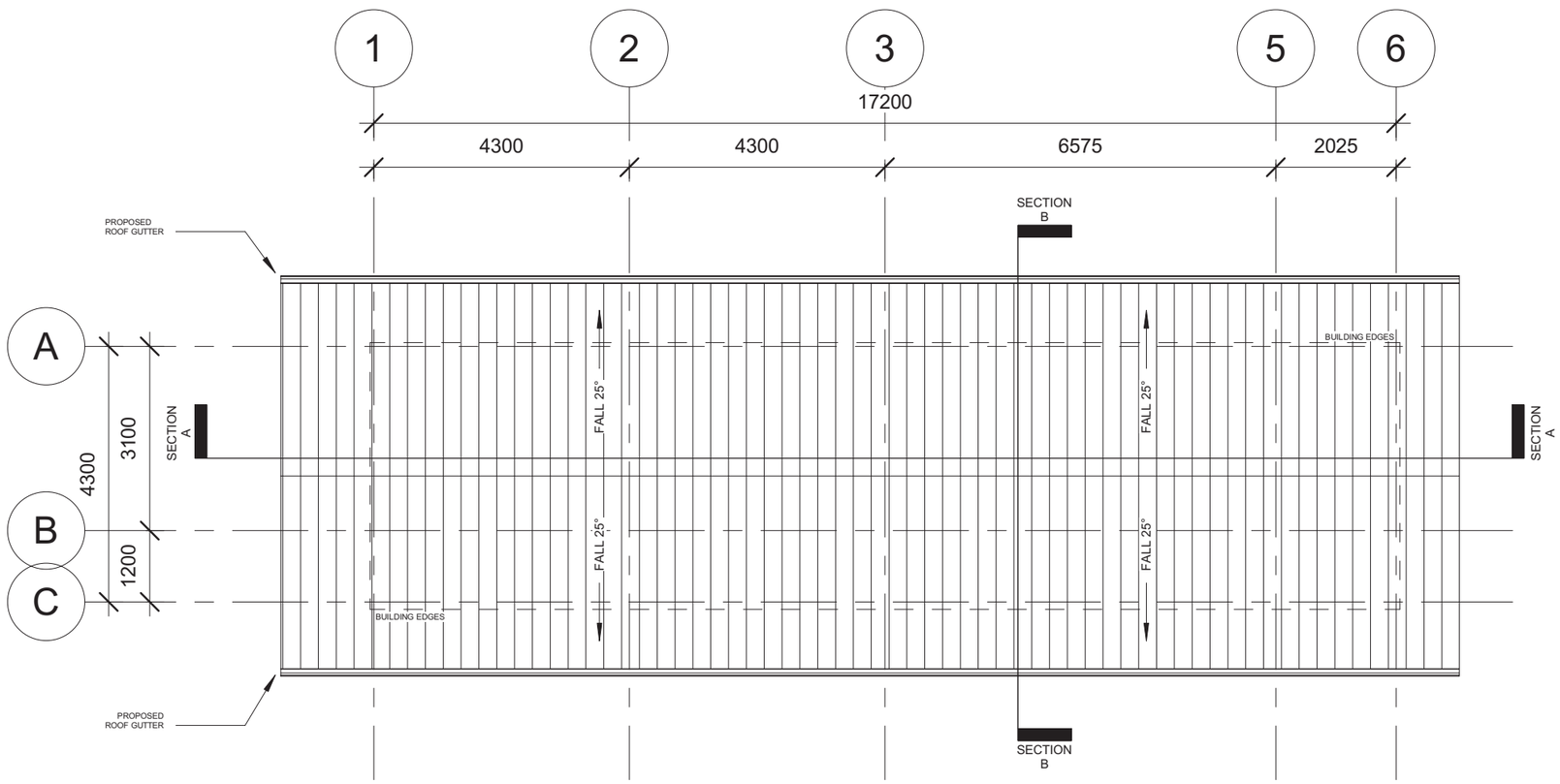

ROOF PLAN
SCALE 1:100

1:100 @ A3

0 2 5 10 m

Printed:	3/9/2022 10:10:44 AM
Paper size:	A3-LV
Project Status	Schematic Design
Project Date	18/08/2022

Notes

No	Description	Date

KHA arkitek
KHA Arkitek
P.O Box 272
MPC,
Old Airport,
Berakas
BB3122
Contact No: 2610380

Architect's Signature

Khalid Haji Sirat
Registeration No: 00414Ar

Client Name and Approved by:

Department of Agriculture and Agrifood, BD

Project Name And Address

PROPOSED NEW 1 UNIT STANDARD DESIGN OF FARM LABOUR QUARTERS, BRUNEI DARUSSALAM (FOR 5 PERSONS) - OPTION 1

Drawing Name

GROUND FLOOR & ROOF PLAN

Designed By	KHS
Drawn By	KHS/SHA
Checked By	AQI
Scale	1 : 100
Date	08/16/22

Project No	Sheet No	Rev.
PR120	B1	

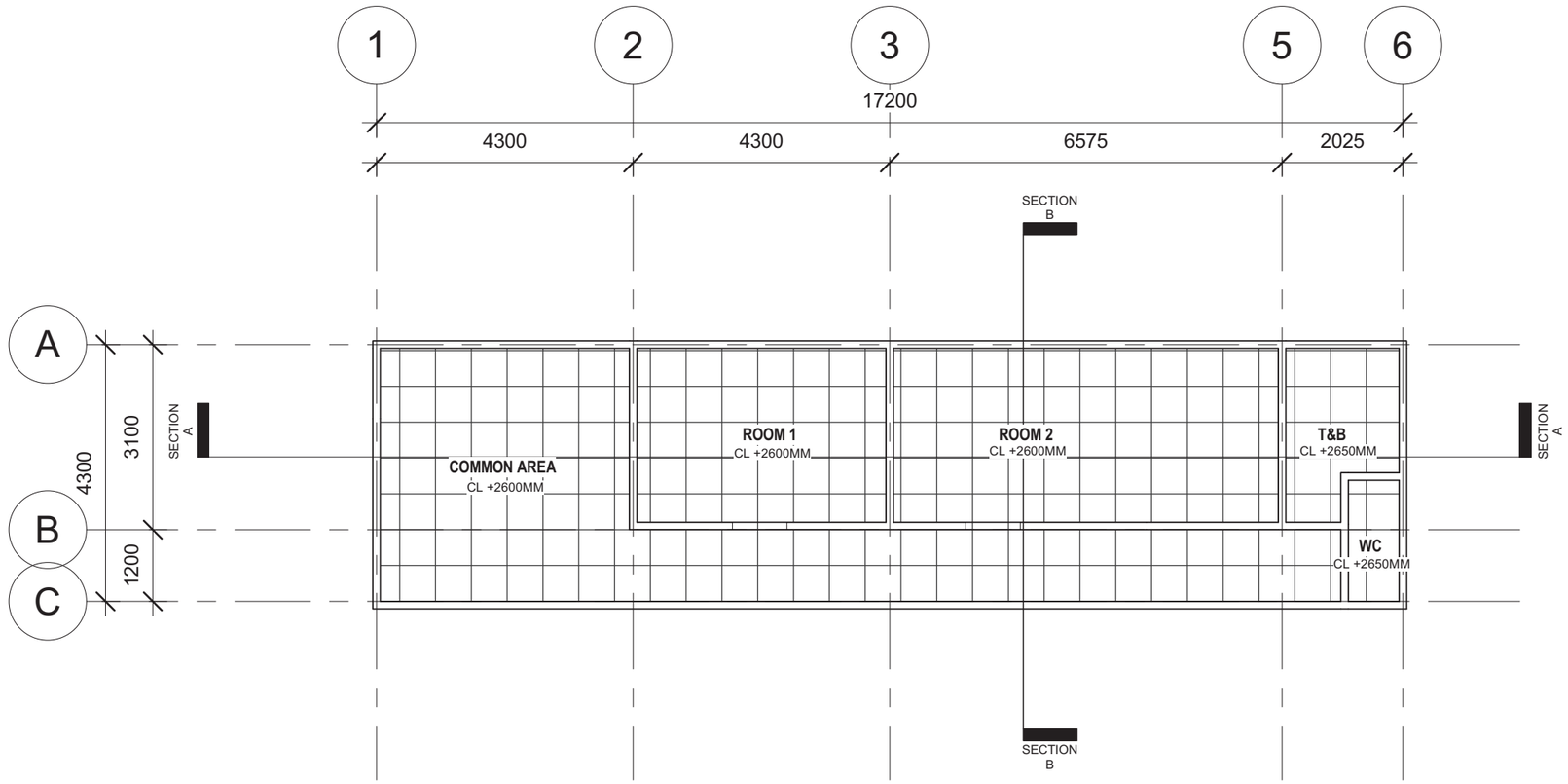

GROUND FLOOR CEILING PLAN

SCALE 1:100

1:100 @ A3

0 2 5 10 m

Printed:	3/9/2022 10:10:44 AM
Paper size:	A3-LV
Project Status	Schematic Design
Project Date	18/08/2022

Notes

No	Description	Date

KHA Arkitek
P.O Box 272
MPC,
Old Airport,
Berakas
BB3122

Contact No: 2610380

Architect's Signature

Khalid Haji Sirat

Registeration No: 00414Ar

Client Name and Approved by:

Department of Agriculture and Agrifood, BD

Project Name And Address

PROPOSED NEW 1 UNIT STANDARD DESIGN OF FARM LABOUR QUARTERS, BRUNEI DARUSSALAM (FOR 5 PERSONS) - OPTION 1

Drawing Name

GROUND FLOOR CEILING PLAN

Designed By	KHS
Drawn By	KHS/SHA
Checked By	AQI
Scale	1 : 100
Date	08/22/22

Project No	Sheet No	Rev.
PR120	C1	

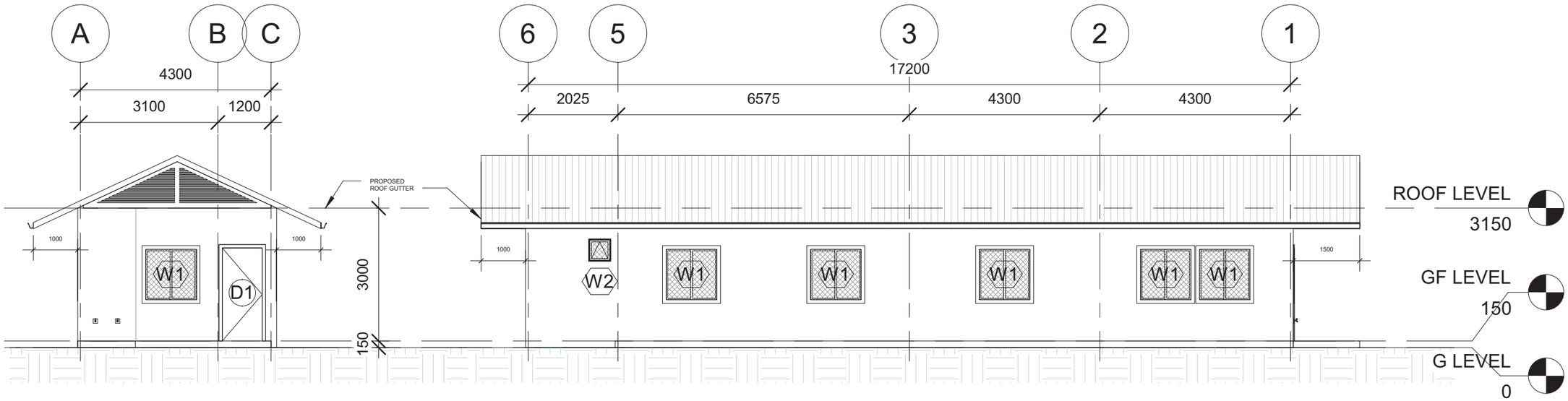

FRONT & LEFT ELEVATION

SCALE 1:100

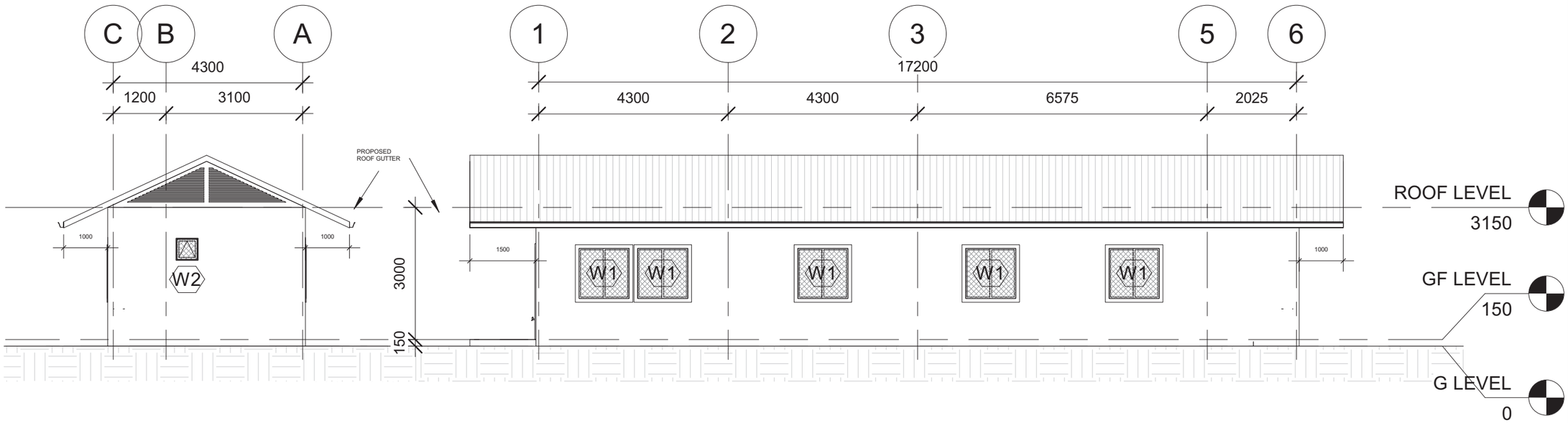

REAR & RIGHT ELEVATION

SCALE 1:100

1:100 @ A3

0 2 5 10 m

Printed:	3/9/2022 10:10:45 AM
Paper size:	A3-LV
Project Status	Schematic Design
Project Date	18/08/2022

Notes

No	Description	Date

KHA arkitek
KHA Arkitek
P.O Box 272
MPC,
Old Airport,
Berakas
BB3122
Contact No: 2610380

Architect's Signature

Khalid Haji Sirat

Registeration No: 004-14Ar

Client Name and Approved by:

Department of Agriculture and Agrifood, BD

Project Name And Address

PROPOSED NEW 1 UNIT STANDARD DESIGN OF FARM LABOUR QUARTERS, BRUNEI DARUSSALAM (FOR 5 PERSONS) - OPTION 1

Drawing Name

ELEVATIONS

Designed By	KHS
Drawn By	KHS/SHA
Checked By	AQI
Scale	1 : 100
Date	08/16/22

Project No	Sheet No	Rev.
PR120	D1	

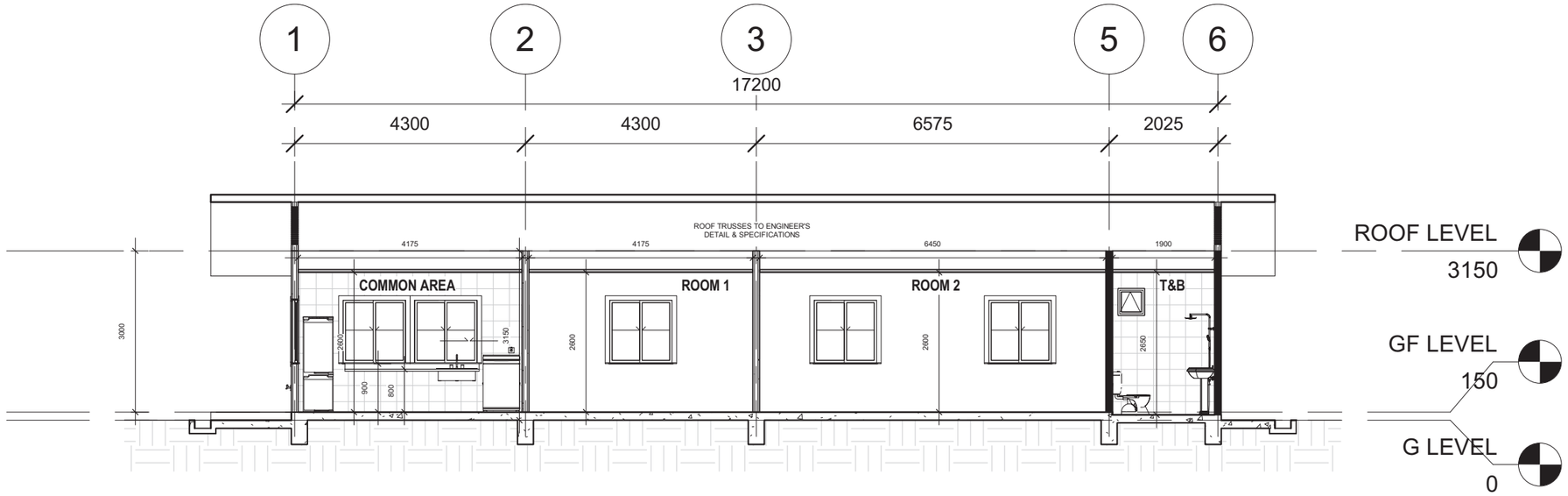

SECTION A-A
SCALE 1:100

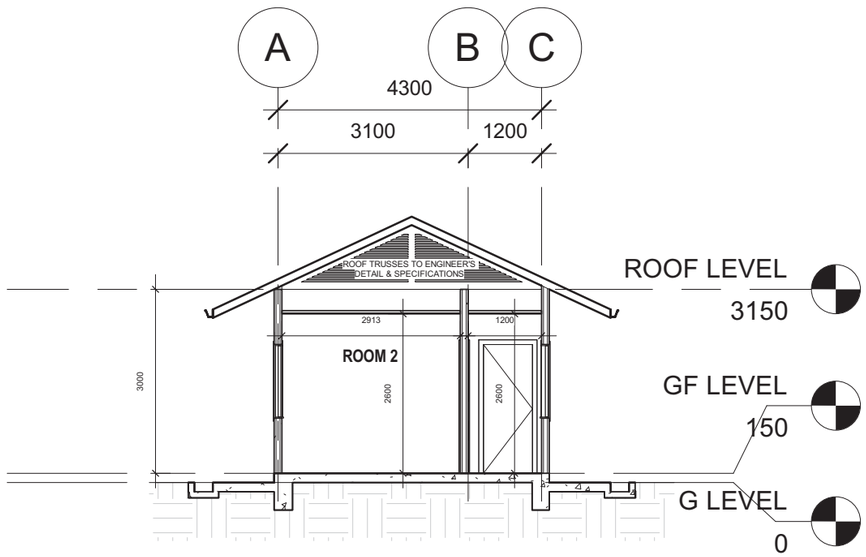

SECTION B-B
SCALE 1:100

1:100 @ A3

0 2 5 10 m

Printed:	3/9/2022 10:10:47 AM
Paper size:	A3-LV
Project Status	Schematic Design
Project Date	18/08/2022

Notes

No	Description	Date

KHA Arkitek
P.O Box 272
MPC,
Old Airport,
Berakas
BB3122

Contact No: 2610380

Architect's Signature

Khalid Haji Sirat
Registeration No: 00414Ar

Client Name and Approved by:

Department of Agriculture and Agrifood, BD

Project Name And Address

PROPOSED NEW 1 UNIT STANDARD DESIGN OF FARM LABOUR QUARTERS, BRUNEI DARUSSALAM (FOR 5 PERSONS) - OPTION 1

Drawing Name

SECTION A & B

Designed By	KHS
Drawn By	KHS/SHA
Checked By	AQI
Scale	1 : 100
Date	08/16/22

Project No	Sheet No	Rev.
PR120	E1	

WINDOW SCHEDULE
SCALE 1:50

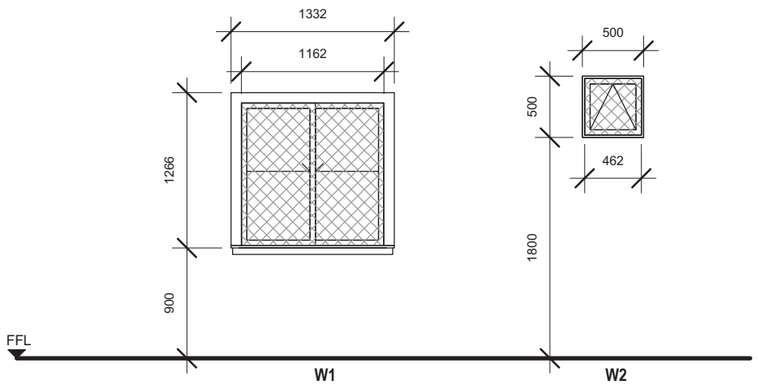

WINDOW SCHEDULE

CODE	Nos	Location	Level	Sill Height	Width	Height	Description
W1	5	COMMON AREA	GF LEVEL	900	1200	1200	TWO PANEL SLIDING ALUMINIUM FRAMED WINDOW W/6MM THK. CLEAR GLASS W/ MOSQUITO NET COVER COMPLETE W/ ACCESSORIES TO MANUFACTURERS DETAILS
W1	3	HALLWAY	GF LEVEL	900	1200	1200	TWO PANEL SLIDING ALUMINIUM FRAMED WINDOW W/6MM THK. CLEAR GLASS W/ MOSQUITO NET COVER COMPLETE W/ ACCESSORIES TO MANUFACTURERS DETAILS
W1	1	ROOM 1	GF LEVEL	900	1200	1200	TWO PANEL SLIDING ALUMINIUM FRAMED WINDOW W/6MM THK. CLEAR GLASS W/ MOSQUITO NET COVER COMPLETE W/ ACCESSORIES TO MANUFACTURERS DETAILS
W1	2	ROOM 2	GF LEVEL	900	1200	1200	TWO PANEL SLIDING ALUMINIUM FRAMED WINDOW W/6MM THK. CLEAR GLASS W/ MOSQUITO NET COVER COMPLETE W/ ACCESSORIES TO MANUFACTURERS DETAILS
W2	1	T&B	GF LEVEL	1800	500	500	TOP HUNG ALUMINIUM FRAMED WINDOW W/6MM THK. CLEAR GLASS W/ MOSQUITO NET COVER COMPLETE W/ ACCESSORIES TO MANUFACTURERS DETAILS
W2	1	WC	GF LEVEL	1800	500	500	TOP HUNG ALUMINIUM FRAMED WINDOW W/6MM THK. CLEAR GLASS W/ MOSQUITO NET COVER COMPLETE W/ ACCESSORIES TO MANUFACTURERS DETAILS

Printed:	9/21/2022 4:29:10 PM
Paper size:	A3-LV
Project Status	Schematic Design
Project Date	18/08/2022

Notes

No	Description	Date

KHA Arkitek
P.O Box 272
MPC,
Old Airport,
Berakas
BB3122
Contact No: 2610380

Architect's Signature

Khalid Haji Sirat
Registeration No: 0041

Client Name and Approved by:

Department of Agriculture and Agrifood, BD

Project Name And Address

PROPOSED NEW 1 UNIT STANDARD DESIGN OF FARM LABOUR QUARTERS, BRUNEI DARUSSALAM (FOR 5 PERSONS) - OPTION 1

Drawing Name

WINDOW SCHEDULE

Designed By	KHS
Drawn By	KHS/SHA
Checked By	AQI
Scale	1 : 50
Date	08/25/22

Project No	Sheet No	Rev.
PR120	F1	

DOOR SCHEDULE
SCALE 1:50

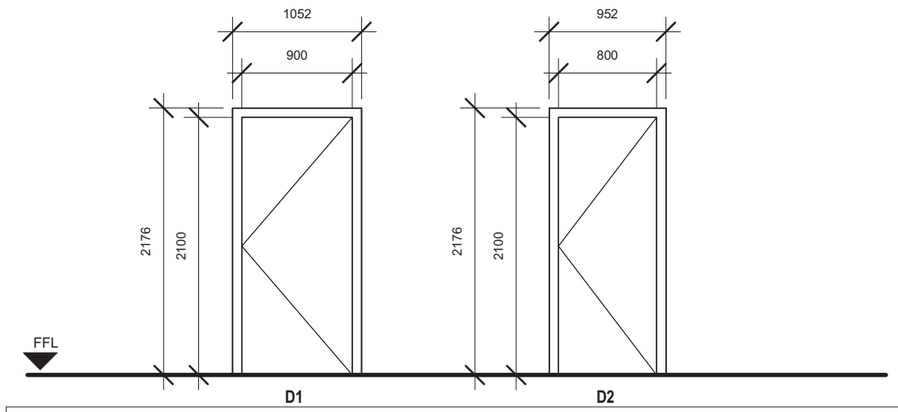

DOOR SCHEDULE						
CODE	Nos	Location	Level	Width	Height	Description
D1	1	COMMON AREA	GF LEVEL	900	2100	SINGLE LEAF SOLID FIRE RATED DOOR TO MANUFACTURER'S DETAIL
D1	2	HALLWAY	GF LEVEL	900	2100	SINGLE LEAF SOLID FIRE RATED DOOR TO MANUFACTURER'S DETAIL
D2	2	HALLWAY	GF LEVEL	800	2100	SINGLE LEAF LAMINATED SOLID DOOR TO MANUFACTURER'S DETAIL

NOTES: ANY DOOR THAT OPEN DIRECTLY TO THE OUTSIDE SHALL BE PROVIDED WITH INSECT SCREEN TO MANUFACTURERS DETAIL AND SPECIFICATION

IRONMONGERIES SCHEDULE

					HARDWARE SET					
					DORMA Stainless Steel Butt Hinge 2BB Stainless Steel, (4"x 3.0" x 2.5mm) or equivalent	DORMA Knob Type Lockset CK800 Series 60mm Grade 2 – US32D Finish CK 801 Entrance Function or equivalent	DORMA Knob Type Lockset CK800 Series 60mm Grade 2 – US32D Finish CK 803 Privacy Function or equivalent	ELITE 500 Door Stopper S066701 or equivalent	DORMA Barrel Bolt 2750x300MM SNP or equivalent	UNITY DGS01 stainless steel security door guard
	DOOR SCHEDULE	WIDTH x HEIGHT (mm)	QTY	DOOR TYPE	H1	L1	L2	A1	A2	A3
					HINGES	LOCKSETS		ACCESSORIES		
GROUND FLOOR										
COMMON AREA	D1	900 x 2100mm	1	FIRE DOOR SINGLE	3	●		●		●
ROOM 1	D1	900 x 2100mm	1	FIRE DOOR SINGLE	3	●	●	●		
ROOM 2	D1	900 x 2100mm	1	FIRE DOOR SINGLE	3	●	●	●		
TB	D2	800 x 2100mm	1	LAMINATED SOLID DOOR SINGLE	3		●		●	

CODE	CATEGORIES	IMAGES
H1	HINGES	
L1	LOCKSET	
L2		
NO.1	ACCESSORIES	
NO.2		
NO.3		

NOTES: BRAND MAY VARIES TO SUIT USER'S SAFETY AND THE ARCHITECT'S APPROVAL

Printed:	3/9/2022 10:10:48 AM
Paper size:	A3-LV
Project Status	Schematic Design
Project Date	18/08/2022

Notes

No	Description	Date

KHA Arkitek
P.O Box 272
MPC,
Old Airport,
Berakas
BB3122

Contact No: 2610380

Architect's Signature

Khalid Haji Sirat

Registeration No: 00014

Client Name and Approved by:

Department of Agriculture and Agrifood, BD

Project Name And Address

PROPOSED NEW 1 UNIT STANDARD DESIGN OF FARM LABOUR QUARTERS, BRUNEI DARUSSALAM (FOR 5 PERSONS) - OPTION 1

Drawing Name

DOOR SCHEDULE & IRONMONGERIES SCHEDULE

Designed By	KHS
Drawn By	KHS/SHA
Checked By	AQI
Scale	1 : 50
Date	08/29/22

Project No	Sheet No	Rev.
PR120	F2	

VENTILATION SCHEDULE

ROOM/SPACE	AREA (MSQ)	VENTILATION		LIGHTING	WINDOWS & DOORS	MECHANICAL
		REQUIRED	PROVIDED	PROVIDED		
GROUND FLOOR						
COMMON ROOM	18 MSQ	1.8 MSQ	7.5 MSQ	4.8 MSQ	W1 (4), D1 (1)	SPLIT AC , CEILING FAN
ROOM 1	12 MSQ	1.2 MSQ	1.4 MSQ	1.2 MSQ	W1 (1)	SPLIT AC , CEILING FAN
ROOM 2	12 MSQ	1.2 MSQ	1.4 MSQ	1.2 MSQ	W1 (2)	SPLIT AC , CEILING FAN
T&B	5 MSQ	0.5 MSQ	0.2 MSQ	0.1 MSQ	W2 (1)	EXHAUST FAN
WC	2 MSQ	0.2 MSQ	0.2 MSQ	0.1 MSQ	W2 (1)	EXHAUST FAN
HALLWAY	14 MSQ	1.4 MSQ	4.2 MSQ	3.6 MSQ	W1 (3)	-

MATERIAL SCHEDULE

AREA	FLOOR				WALL							CEILING			ROOF	
	F1	F2	F3	F4	W1	W2	W3	W4	W5	W6	W7	C1	C2	C3	R1	R2
GROUND FLOOR																
APRON				●												
COMMON ROOM	●	●					●	●				●		●	●	●
COMMON ROOM (KITCHEN)	●	●	●		●	●			●	●	●	●		●	●	●
ROOM 1	●	●					●	●				●		●	●	●
ROOM 2	●	●					●	●				●		●	●	●
T&B	●	●	●		●	●			●	●	●		●	●	●	●
WC	●	●	●		●	●			●	●	●		●	●	●	●

CODE	FLOOR FINISHES
F1	300mm X 300mm homogeneous non-slip tile, colour and pattern to be decided by client
F2	Grouting
F3	Waterproofing Treatment or equivalent. All application shall be in accordance to manufacturer specification.
F4	Cement Screed to level

Notes: All potentinally wet area shall be anti slip surface tiles

CODE	WALL FINISHES
W1	25mm Thick Plaster
W2	Brick Wall
W3	ICI paint to manufacturer specification or equivalent, colour and pattern to be decided by client
W4	Light Dry Wall with metal framing
W5	300mm x 300mm Ceramic tiles, colour and pattern to be decided by client
W6	Bonding agent
W7	Grouting

Notes: For External Walls, dry wall complete with metal framing; one side lined with gypsum board and one side with cement board.

CODE	CEILING FINISHES
C1	12mm Gypsum board with metal framing. ICI paint to manufacturer specification, colour and pattern to decided by client
C2	6mm Cement board with metal framing
C3	ICI paint to manufacturer specification or equivalent

CODE	ROOF FINISHES
R1	Colour Lok clip-on system profile or equivalent with 0.53/054mm thickness including joists and purlins and accessories to manufacturer and installation specification, colour and pattern to be decided by client
R2	Waterproofing, all application and installation shall be in accordance to manufacturer specification

SANITARYWARE & FITTINGS SCHEDULE

MATERIAL CODE NO.	WATER CLOSET	LAVATORY	FAUCET			SHOWER FAUCET	PAPER HOLDER	TOWEL BAR	MIRROR	ANAL SPRAY / WASHLET	SINK	FLOOR TRAP
	01	01	01	02	03	01	01	01	01	01	01	01
GROUND FLOOR												
EXTERIOR	-	-	-	2	-	-	-	-	-	-	-	1
COMMON AREA	-	-	-	1	1	-	-	-	-	-	1	2
T&B	1	1	1	-	-	1	1	1	1	1	-	2
WC	1	1	1	-	-	-	1	-	-	1	-	1
TOTAL	2	2	2	3	1	1	2	1	1	2	1	6

CODE	WATER CLOSET
01	SHOWY "WASHDOWN" 2-PIECE CLOSET (630 X 440 X 775MM) S-trap, 250mm Roughing-in. p-trap, 180mm Rouching-in or equivalent
CODE	**LAVATORY**
01	SHOWY-6851 WASHBASIN C/W FULL PEDESTAL (520 X 440 X 800MM) or equivalent
CODE	**FAUCET**
01	SHOWY-3006 "HIGHWAY" EXCLUSIVE S/L BASIN MIXER C/W SWIVEL SPOUT Stock Code: SHOWY-3006-000 or equivalent
02	SHOWY-2908 "BUTTERFLY" BIB TAP C/W 1/2" NOZZLE Stock Code: SHOWY-1755-000 or equivalent
03	SHOWY-3110-3000 "HIGH-GRADE" METAL SINGLE LEVER SINK TAP. Stock Code: SHOWY-3110-001 or equivalent
CODE	**SHOWER FAUCET**
01	SHOWY-3011-3001(R) "CAUSEWAY" 3-WAY LONG BATH MIXER C/W 3041 ABS ROUND SHOWER ROSE & 3039-SH HAND SHOWER Stock Code: SHOWY-3011-013 or equivalent

CODE	PAPER HOLDER
01	SHOWY-7067-000 "LUXI" S/S STAINLESS STEEL PAPER HOLDER or equivalent
CODE	**TOWEL BAR**
01	SHOWY-7142-000 SUS304 S/STEEL DOUBLE TOWEL BAR 600 x 120 x 55mm or equivalent
CODE	**MIRROR**
01	SHOWY-2998-000 480MM X 350MM SILVER COATED MIRROR or equivalent
CODE	**SHOWER SPRAY / WASHLET**
01	SHOWY-2480-011 "JOPAN" CHROME BIDET SPRAY C/W SHOWY-2453 120CM SILVER PVC HOSE & SHOWY-6322-000 "L" QUARTER-TURN ANGLE COCK WITH BIDET SPRAY HOLDER or equivalent
CODE	**SINK**
01	SHOWY-2948-000 "DAGENT" S/S LAY-ON LAUNDRY SINK (600 X 500 X 250MM) or equivalent
CODE	**FLOOR TRAP**
01	SHOWY-2774-000 6" X 6" CHROME ALLOY ADAPTABLE FLOOR TRAP GRATING or equivalent

CODE	CATEGORIES	IMAGES
NO.1	WATER CLOSET	
NO.1	LAVATORY	
NO.1	FAUCET	
NO.2		
NO.3		
NO.1	SHOWER FAUCET	

CODE	CATEGORIES	IMAGES
NO.1	PAPER HOLDER	
NO.1	TOWEL BAR	
NO.1	MIRROR	
NO.1	SHOWER SPRAY / WASHLET	
NO.1	SINK	
NO.1	FLOOR TRAP	

NOTES: BRAND MAY VARIES TO SUIT USER'S COMFORT AND THE ARCHITECT'S APPROVAL

Printed:	9/21/2022 4:29:16 PM
Paper size:	A3-LV
Project Status	Schematic Design
Project Date	18/08/2022

Notes

No	Description	Date

KHA arkitek
KHA Arkitek
P.O Box 272
MPC,
Old Airport,
Berakas
BB3122
Contact No: 2610380

Architect's Signature

Khalid Haji Sirat

Registeration No: 004 Mar

Client Name and Approved by:

Department of Agriculture and Agrifood, BD

Project Name And Address

PROPOSED NEW 1 UNIT STANDARD DESIGN OF FARM LABOUR QUARTERS, BRUNEI DARUSSALAM (FOR 5 PERSONS) - OPTION 1

Drawing Name

VENTILATION & MATERIAL, SANITARYWARE & FITTINGS SCHEDULE

Designed By	KHS
Drawn By	KHS/SHA
Checked By	AQI
Scale	As indicated
Date	08/26/22

Project No	Sheet No	Rev.
PR120	F3	

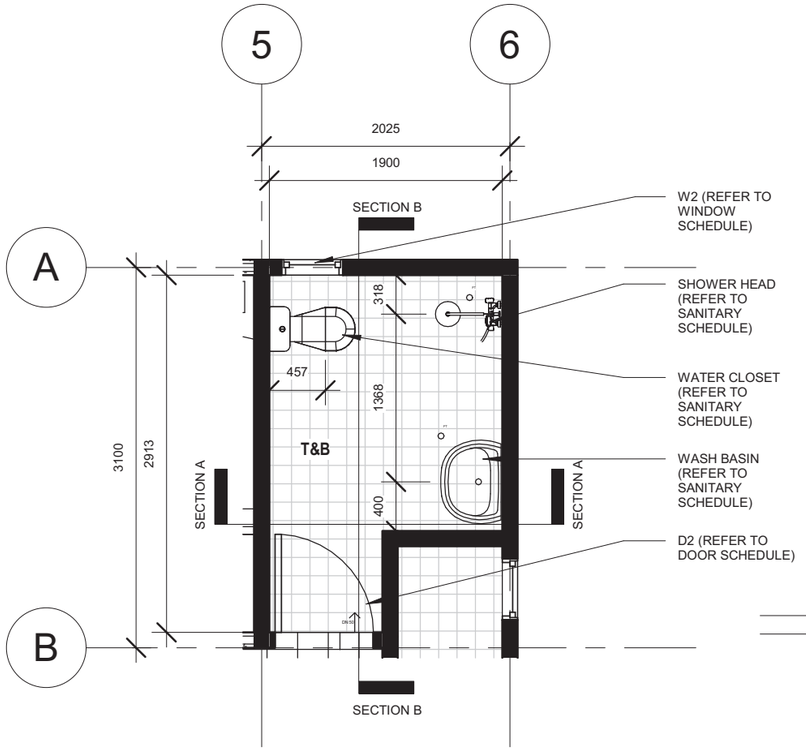

T&B FLOOR PLAN
SCALE 1:50

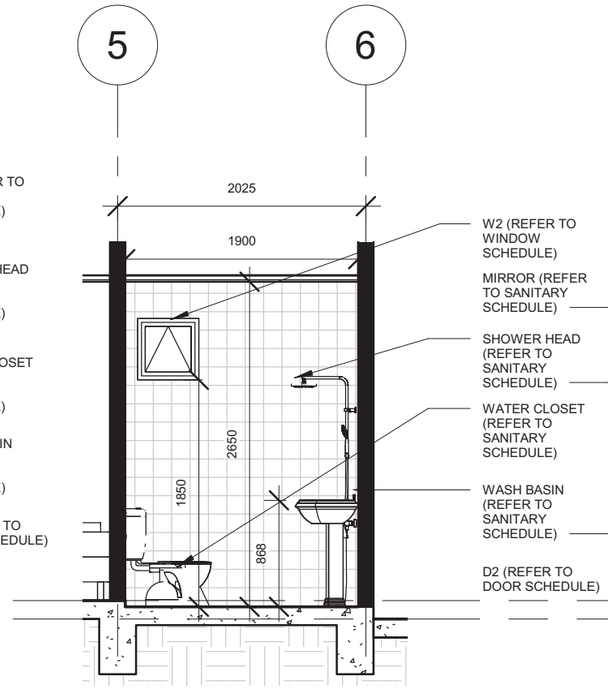

T&B- SECTION A-A
SCALE 1:50

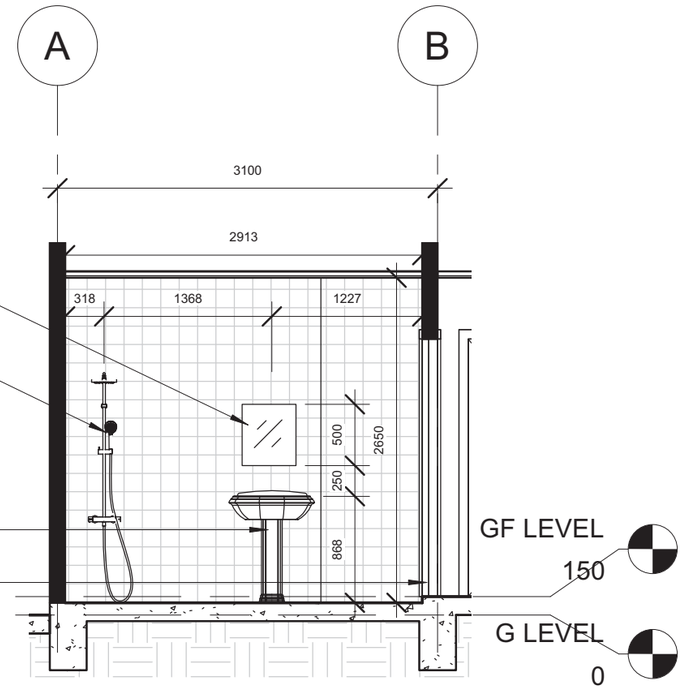

T&B- SECTION B-B
SCALE 1:50

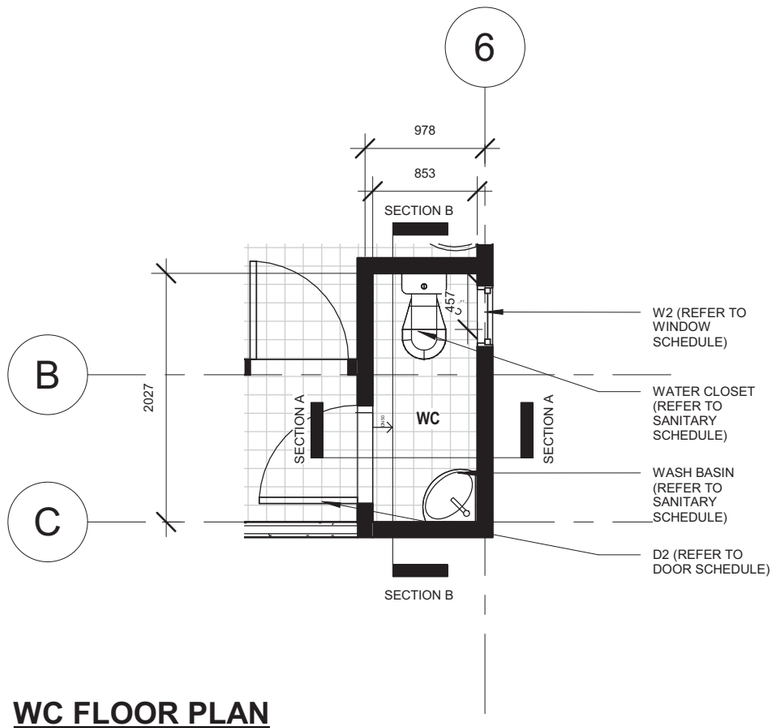

WC FLOOR PLAN
SCALE 1:50

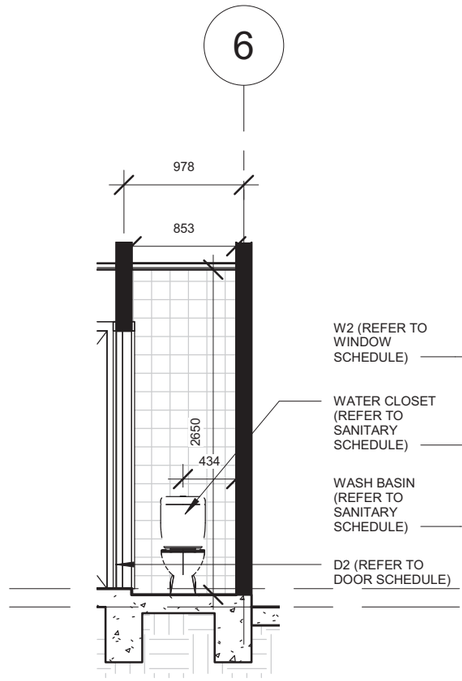

WC- SECTION A-A
SCALE 1:50

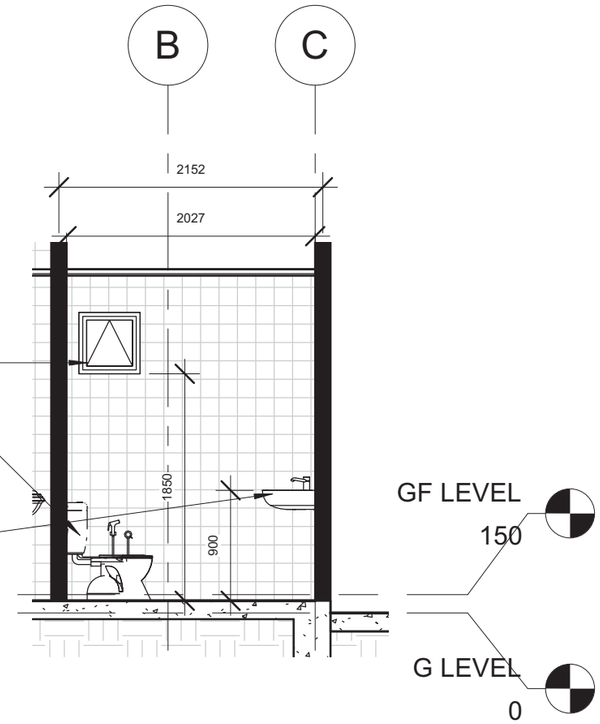

WC- SECTION B-B
SCALE 1:50

Printed:	3/9/2022 10:10:54 AM
Paper size:	A3-LV
Project Status	Schematic Design
Project Date	18/08/2022

Notes

No	Description	Date

KHA Arkitek
P.O Box 272
MPC,
Old Airport,
Berakas
BB3122

Contact No: 2610380

Architect's Signature

Khalid Haji Sirat
Registeration No: 004 1 [illegible]

Client Name and Approved by:

Department of Agriculture and Agrifood, BD

Project Name And Address

PROPOSED NEW 1 UNIT STANDARD DESIGN OF FARM LABOUR QUARTERS, BRUNEI DARUSSALAM (FOR 5 PERSONS) - OPTION 1

Drawing Name

TB & WC DETAILS

Designed By	KHS
Drawn By	KHS/SHA
Checked By	AQI
Scale	1 : 50
Date	08/26/22

Project No	Sheet No	Rev.
PR120	G1	

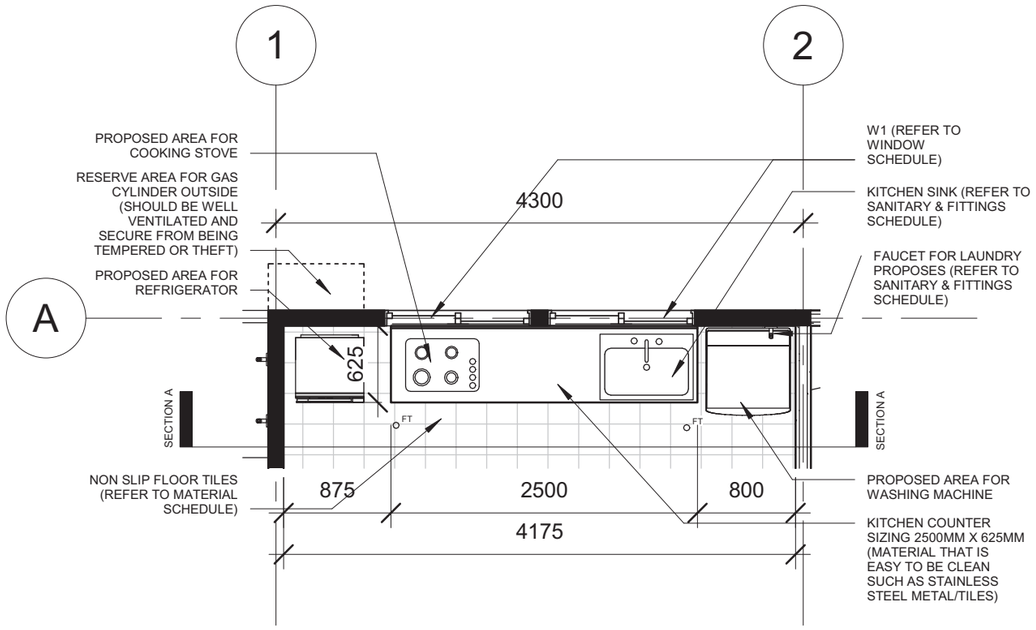

KITCHEN FLOOR PLAN
SCALE 1:50

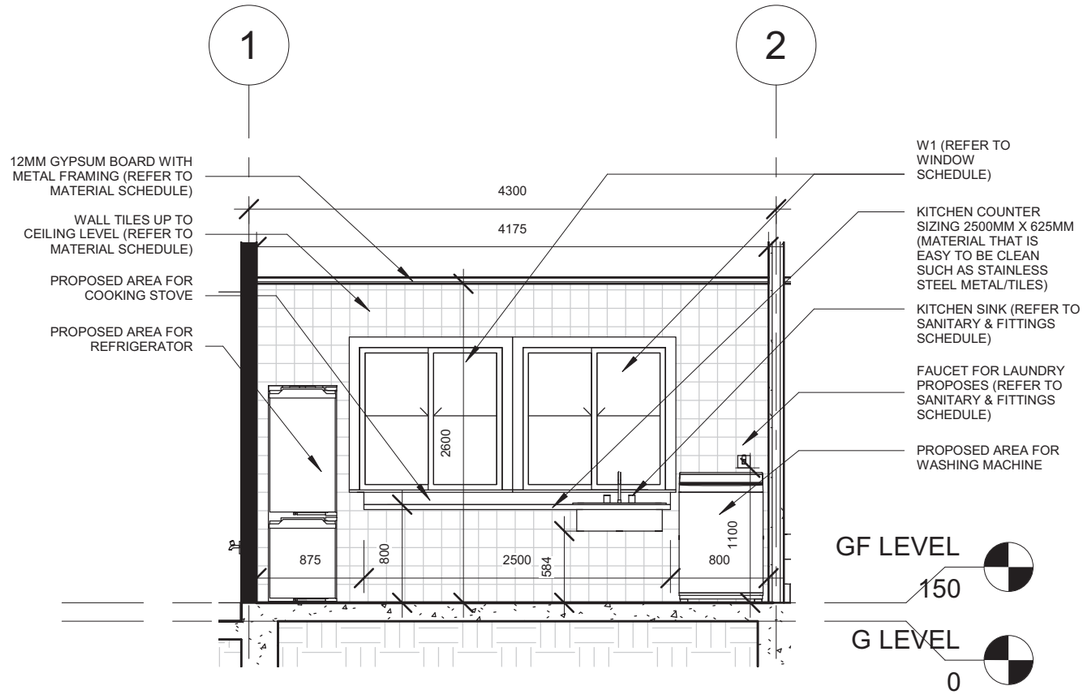

KITCHEN SECTION A-A
SCALE 1:50

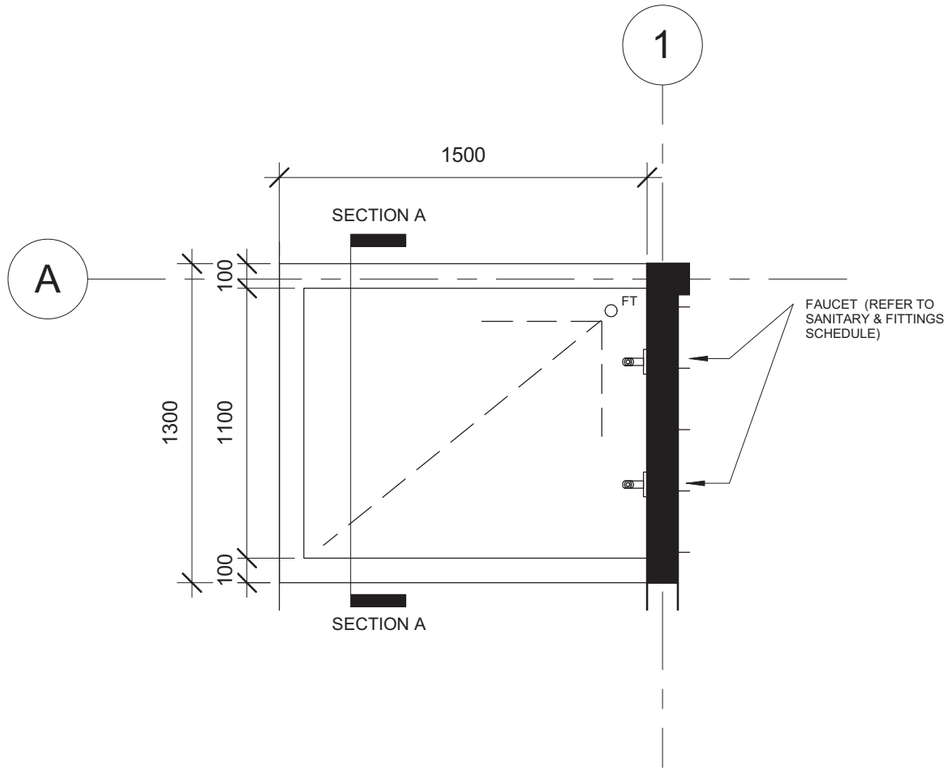

SHOE WASHING AREA FLOOR PLAN
SCALE 1:25

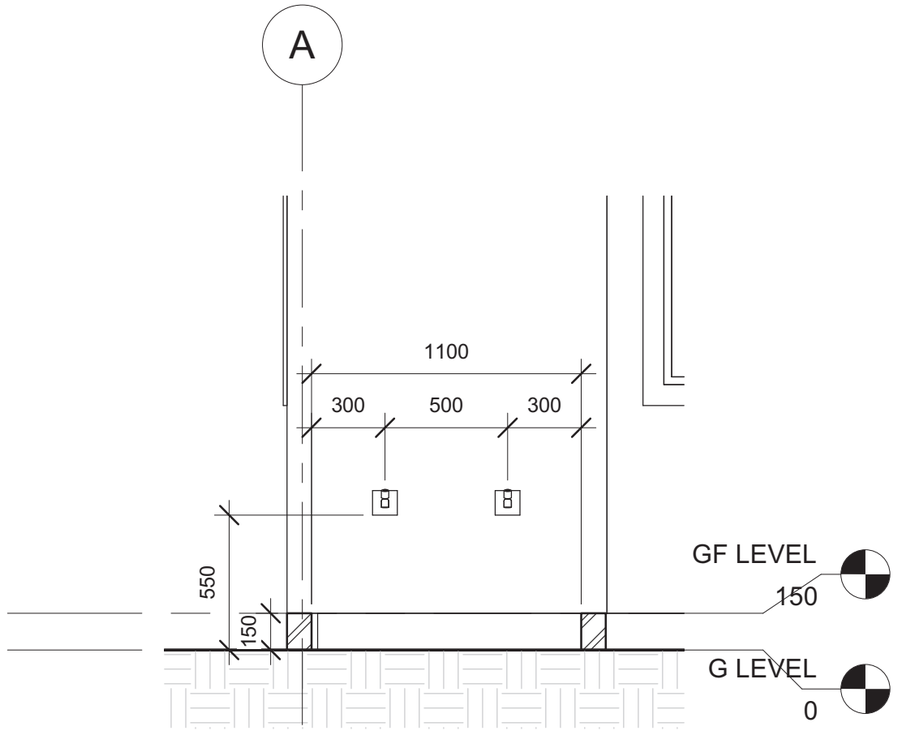

SHOE WASHING AREA SECTION A-A
SCALE 1:25

Printed:	3/9/2022 10:10:56 AM
Paper size:	A3-LV
Project Status	Schematic Design
Project Date	18/08/2022

Notes

No	Description	Date

KHA arkitek
KHA Arkitek
P.O Box 272
MPC,
Old Airport,
Berakas
BB3122
Contact No: 2610380

Architect's Signature

Khalid Haji Sirat
Registeration No: 0047

Client Name and Approved by:

Department of Agriculture and Agrifood, BD

Project Name And Address

PROPOSED NEW 1 UNIT STANDARD DESIGN OF FARM LABOUR QUARTERS, BRUNEI DARUSSALAM (FOR 5 PERSONS) - OPTION 1

Drawing Name

KITCHEN & SHOE WASHING AREA DETAILS

Designed By	KHS
Drawn By	KHS/SHA
Checked By	AQI
Scale	As indicated
Date	08/30/22

Project No	Sheet No	Rev.
PR120	G2	

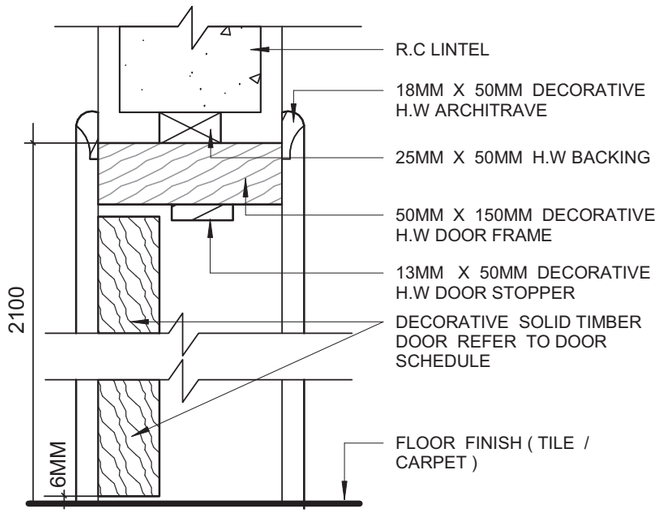

DOOR JAMB DETAIL
SCALE 1:5

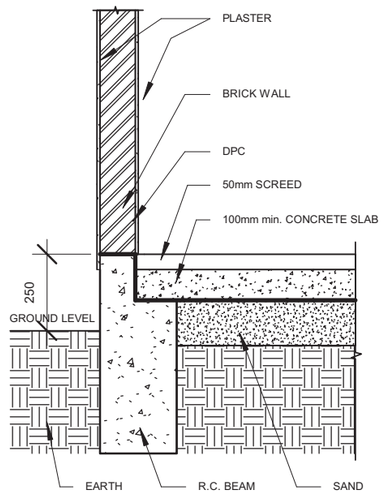

TYPICAL DPC DETAILS (SOLID WALL)
SCALE 1:20

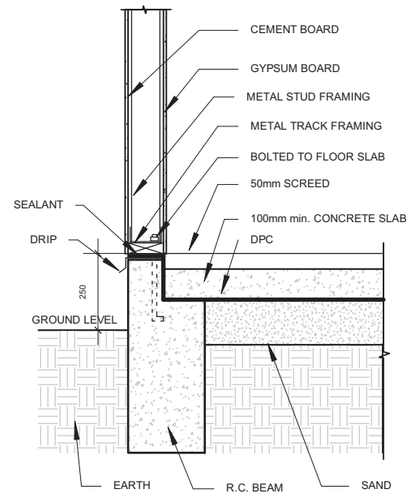

TYPICAL DPC DETAILS (DRY WALL)
SCALE 1:20

NOTES: DRY WALL CAN BE OPTED FOR WALL SANDWICH PANEL TO THE MANUFACTURER'S DETAILS AND SPECIFICATIONS

*For External Walls, dry wall complete with metal framing; one side lined with gypsum board and one side with cement board.

*For Internal Walls, dry wall complete with metal framing; both sides lined with gypsum board.

DETAIL OF SURFACE DRAIN WITH HEAVY DUTY MS GRATING COVER

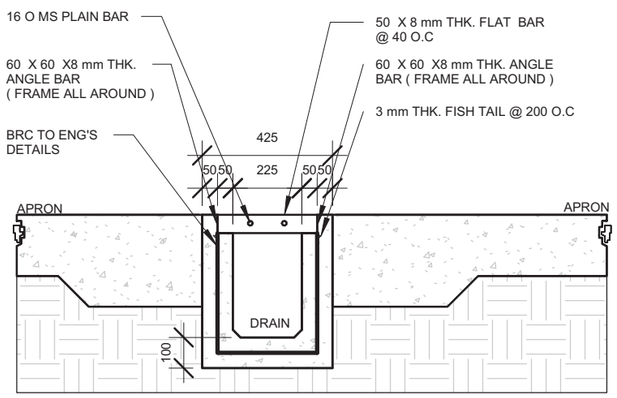

SECTIONAL 225MM
SCALE 1 : 20

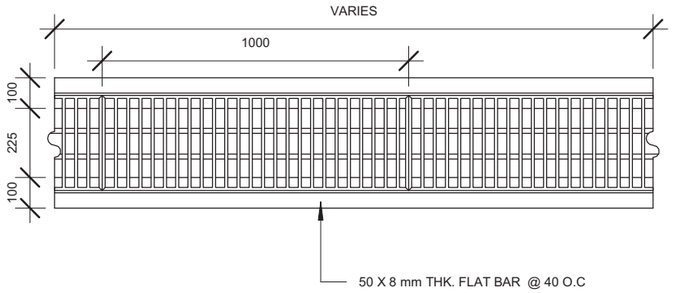

TOP DRAIN PLAN
SCALE 1 : 20

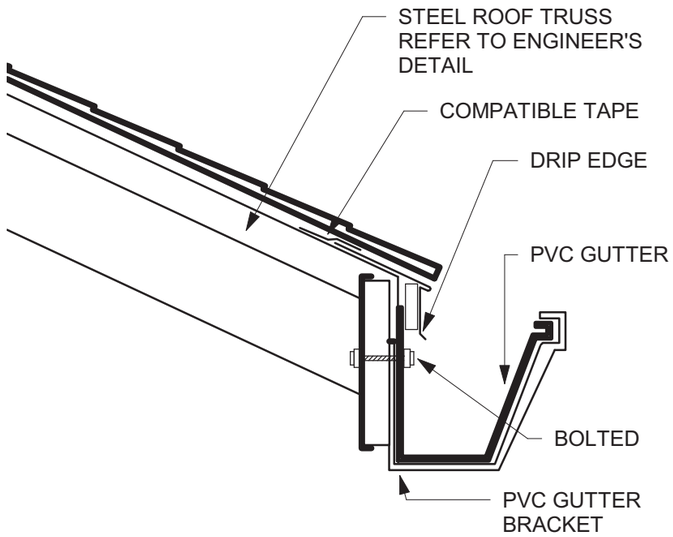

GUTTER DETAILS
SCALE 1:5

Printed:	9/21/2022 4:29:50 PM
Paper size:	A3-LV
Project Status	Schematic Design
Project Date	18/08/2022

Notes

No	Description	Date

KHA Arkitek
P.O Box 272
MPC,
Old Airport,
Berakas
BB3122

Contact No: 2610380

Architect's Signature

Khalid Haji Sirat
Registeration No: 0041

Client Name and Approved by:

Department of Agriculture and Agrifood, BD

Project Name And Address

PROPOSED NEW 1 UNIT STANDARD DESIGN OF FARM LABOUR QUARTERS, BRUNEI DARUSSALAM (FOR 5 PERSONS) - OPTION 1

Drawing Name

DOOR JAMB, TYPICAL DPC, GUTTER AND SURFACE DRAIN DETAILS

Designed By	KHS
Drawn By	KHS/SHA
Checked By	AQI
Scale	As indicated
Date	08/30/22

Project No	Sheet No	Rev.
PR120	G3	

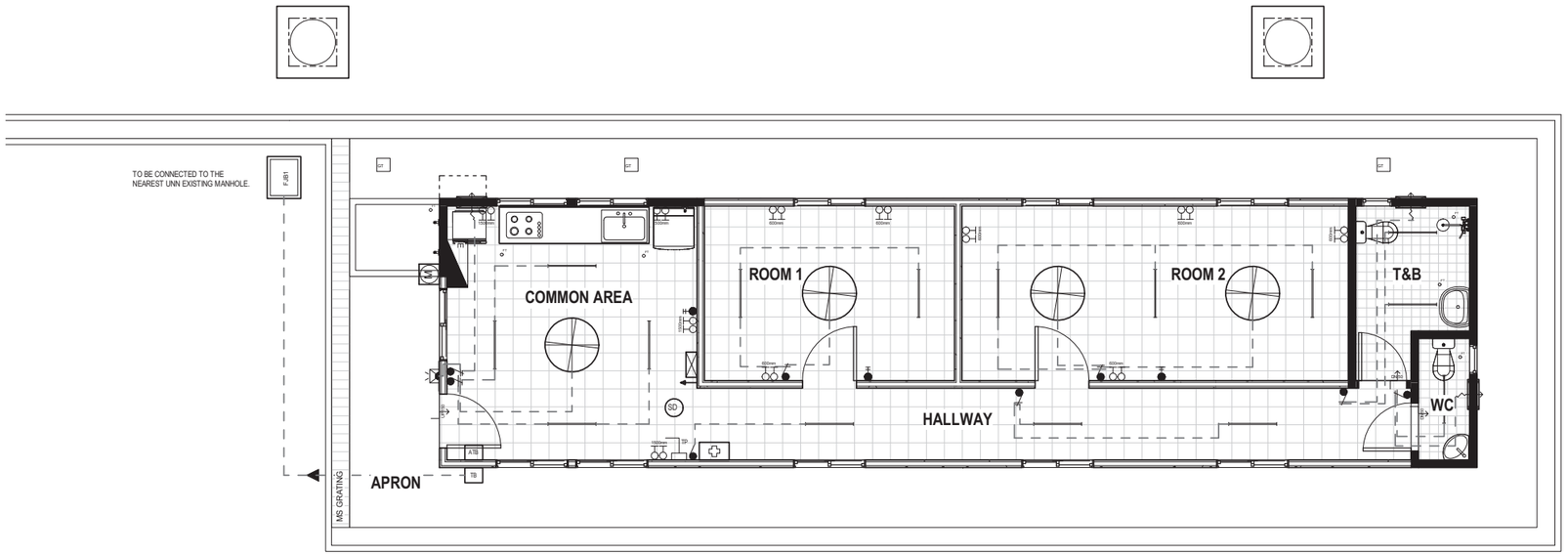

ELECTRICAL SYMBOLS	
	1X LED TUBE LIGHTING
	WALL LIGHTING (WALL MOUNTED & WEATHERPROOF LIGHT FIXTURE)
	ONE GANG SINGLE TOGGLED SWITCH POINT
	ONE GANG TWO TOGGLED SWITCH POINT
	ONE GANG THREE TOGGLED SWITCH POINT
600mm	2 x 13A SOCKET OUTLET at 600mm HIGH ABOVE FINISHED FLOOR LEVEL. FOR EXTERNAL AREA, WATER PROOF BOX OR COVER SHALL BE USED
1500mm	2 x 13A SOCKET OUTLET at 1500mm HIGH ABOVE FINISHED FLOOR LEVEL. FOR EXTERNAL AREA, WATER PROOF BOX OR COVER SHALL BE USED
	15A SWITCH SOCKET OUTLET
	CEILING FAN
E	ELECTRICAL DISTRIBUTION BOARD
M	PRE-PAID ELECTRIC METER
	300mm Dia. EXHAUST FAN PT.COME WITH FUSE CONNECTIOPN UNIT

JPB SYMBOLS	
	2.5KG (CO2) DRY EXTINGUISHER
	FIRE BLANKET (1 x 1.2 x 1.8m)
SD	SMOKE DETECTOR
TELECOMMUNICATION SYMBOLS	
TP	TELEPHONE OUTLET
ATB	ACCESS TERMINATION BOX
TB	TERMINATION BOX
FIRST AID SYMBOLS	
	FIRST AID KIT BOX

GROUND FLOOR ELECTRICAL LAYOUT PLAN

SCALE 1:100

1:100 @ A3

0 2 5 10 m

Printed:	3/9/2022 10:10:57 AM
Paper size:	A3-LV
Project Status	Schematic Design
Project Date	18/08/2022

Notes

No	Description	Date

KHA arkitek
KHA Arkitek
P.O Box 272
MPC,
Old Airport,
Berakas
BB3122
Contact No: 2610380

Architect's Signature

Khalid Haji Sirat

Registeration No: 00414Ar

Client Name and Approved by:

Department of Agriculture and Agrifood, BD

Project Name And Address

PROPOSED NEW 1 UNIT STANDARD DESIGN OF FARM LABOUR QUARTERS, BRUNEI DARUSSALAM (FOR 5 PERSONS) - OPTION 1

Drawing Name

GROUND FLOOR ELECTRICAL LAYOUT PLAN

Designed By	KHS
Drawn By	KHS/SHA
Checked By	AQI
Scale	1 : 100
Date	09/02/22

Project No	Sheet No	Rev.
PR120	K1	

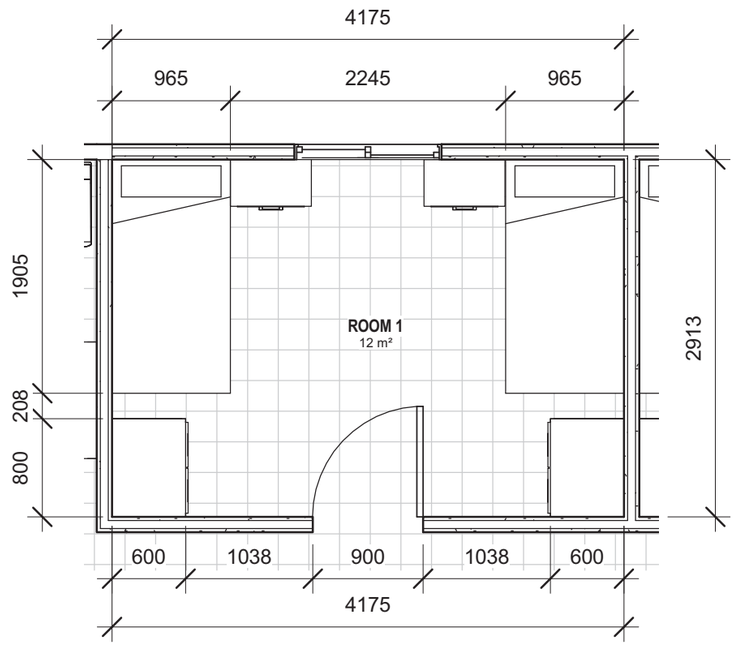

ROOM 1
SCALE 1:50

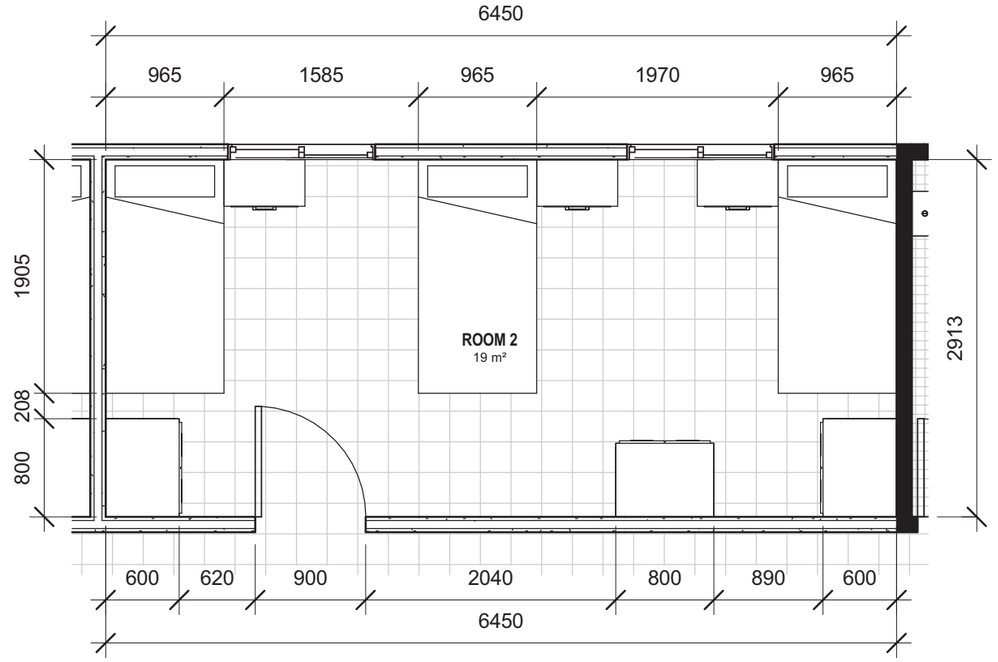

ROOM 2
SCALE 1:50

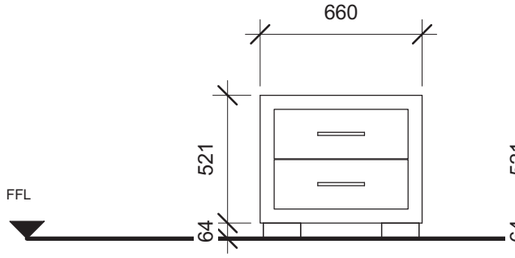

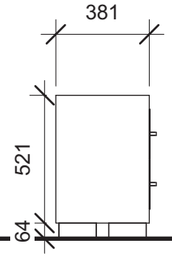

END TABLE

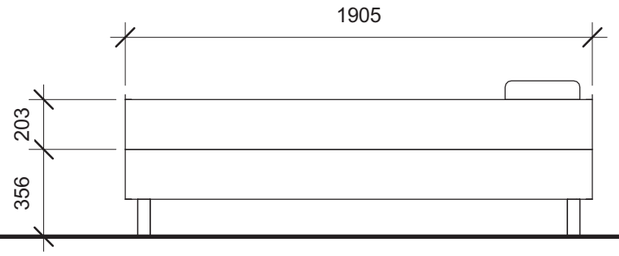

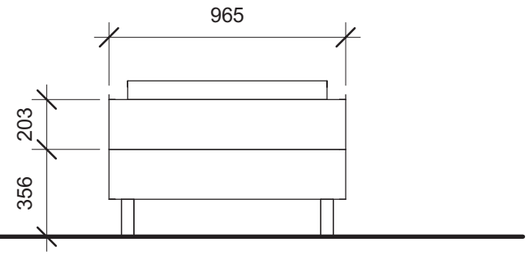

SINGLE BED

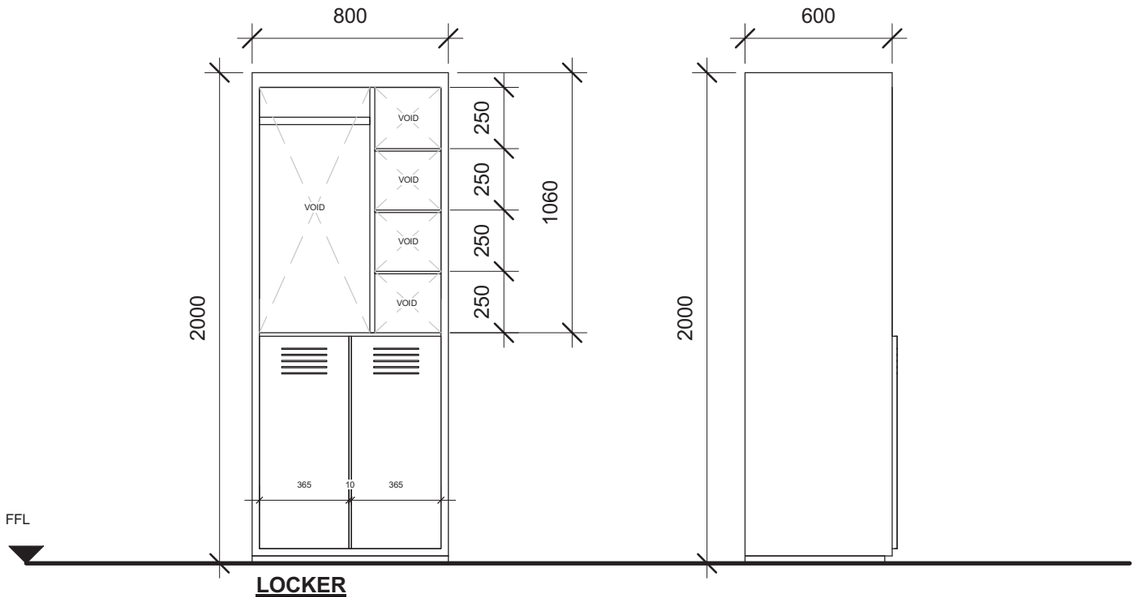

LOCKER

BED REQUIREMENT

- Single Bed
- Sizing 900m x 1900mm, 300mm from the floor to bottom mattress.
- 1500mm between beds

LOCKER REQUIREMENT

- Lockable
- Sizing 2000mm(h) x 800mm x 600mm
- Open shelf

FURNITURE SCHEDULE
SCALE 1:25

Printed:	3/9/2022 10:10:58 AM
Paper size:	A3-LV
Project Status	Schematic Design
Project Date	18/08/2022

Notes

No	Description	Date

KHA arkitek
KHA Arkitek
P.O Box 272
MPC,
Old Airport,
Berakas
BB3122
Contact No: 2610380

Architect's Signature
Khalid Haji Sirat
Registeration No: 004 1997

Client Name and Approved by:

Department of Agriculture and Agrifood, BD

Project Name And Address

PROPOSED NEW 1 UNIT STANDARD DESIGN OF FARM LABOUR QUARTERS, BRUNEI DARUSSALAM (FOR 5 PERSONS) - OPTION 1

Drawing Name

ROOM PLANS & FURNITURE SCHEDULE

Designed By	KHS
Drawn By	KHS/SHA
Checked By	AQI
Scale	As indicated
Date	08/27/22

Project No	Sheet No	Rev.
PR120	P1	

PROPOSED NEW 1 UNIT STANDARD DESIGN OF FARM LABOUR QUARTERS, BRUNEI DARUSSALAM (FOR 5 PERSONS) -OPTION 1

LIST OF DRAWINGS

	DESCRIPTIONS	DRAWING NO.	REVISION NO.	REMARKS
1	LIST OF DRAWINGS	SBC/Q366/AFLQ/5P/RC/L - 100	2	
2	GENERAL NOTES	SBC/Q366/AFLQ/5P/RC/G-100		
3	150x150mm R.C PRECAST PILE FOUNDATION LAYOUT PLAN	SBC/Q366/AFLQ/5P/RC/CS-100		
4	PAD FOOTING FOUNDATION LAYOUT PLAN [ALLOWABLE STRESS OF SOIL 100 KN/m²]	SBC/Q366/AFLQ/5P/RC/CS-101		
5	PAD FOOTING DETAILS - 1 [ALLOWABLE STRESS OF SOIL 100KN/m²]	SBC/Q366/AFLQ/5P/RC/CS-101A		
6	PAD FOOTING DETAILS - 2 [ALLOWABLE STRESS OF SOIL 100KN/m²]	SBC/Q366/AFLQ/5P/RC/CS-101B		
7	PAD FOOTING FOUNDATION LAYOUT PLAN [ALLOWABLE STRESS OF SOIL 150 KN/m²]	SBC/Q366/AFLQ/5P/RC/CS-102		
8	PAD FOOTING DETAILS - 1 [ALLOWABLE STRESS OF SOIL 150KN/m²]	SBC/Q366/AFLQ/5P/RC/CS-102A		
9	PAD FOOTING DETAILS - 2 [ALLOWABLE STRESS OF SOIL 150KN/m²]	SBC/Q366/AFLQ/5P/RC/CS-102B		
10	PAD FOOTING FOUNDATION LAYOUT PLAN [ALLOWABLE STRESS OF SOIL 200 KN/m²]	SBC/Q366/AFLQ/5P/RC/CS-103		
11	PAD FOOTING DETAILS - 1 [ALLOWABLE STRESS OF SOIL 200KN/m²]	SBC/Q366/AFLQ/5P/RC/CS-103A		
12	PAD FOOTING DETAILS - 2 [ALLOWABLE STRESS OF SOIL 200KN/m²]	SBC/Q366/AFLQ/5P/RC/CS-103B		
13	COLUMN SCHEDULE	SBC/Q366/AFLQ/5P/RC/CS-104		
14	GROUND FLOOR BEAM LAYOUT PLAN	SBC/Q366/AFLQ/5P/RC/CS-200		
15	GROUND FLOOR BEAM DETAILS	SBC/Q366/AFLQ/5P/RC/CS-201		
16	ROOF BEAM LAYOUT PLAN	SBC/Q366/AFLQ/5P/RC/CS-300		
17	ROOF BEAM DETAILS	SBC/Q366/AFLQ/5P/RC/CS-301		
18	ROOF TRUSSES LAYOUT PLAN	SBC/Q366/AFLQ/5P/RC/CS-400		
19	ROOF TRUSS SECTION(FOR ROOF TRUSS TO REINFORCE CONCRETE BEAM CONNECTION)	SBC/Q366/AFLQ/5P/RC/CS-401		
20	ROOF TRUSS SECTION (FOR ROOF TRUSS TO REINFORCE CONCRETE BEAM CONNECTION)	SBC/Q366/AFLQ/5P/RC/CS-402		
21	MISCELLANEOUS DETAILS - 1	SBC/Q366/AFLQ/5P/RC/MISC-100		
22	MISCELLANEOUS DETAILS - 2	SBC/Q366/AFLQ/5P/RC/MISC-101		

SERI BUMI CONSULTANT Unit 14, 2nd-Flr-Blk-A, Gadong Central, Spg. 21, Gadong BRUNEI

(sbc) SERI BUMI CONSULTANT
CIVIL & STRUCTURAL ENGINEERING CONSULTANT
No: 14, 2nd FLOOR, BLOCK A, GADONG CENTRAL, SIMPANG 21, JALAN GADONG, BSB, BRUNEI DARUSSALAM
TEL: 673-2427275 FAX: 673-2427279
E-MAIL: sbc.brunei@gmail.com

CLIENT:

NO.	AMENDMENTS	BY	DATE

DESIGNED BY	THAN ZAW TUN	
DRAWN BY	SAI	
CHECKED BY	MD. YUNUS	
APPROVED BY		DATE 20/09/2022

SCALE: N.T.S

TITLE: LIST OF DRAWINGS

PROJECT: PROPOSED NEW 1 UNIT STANDARD DESIGN OF FARM LABOUR QUARTERS, BRUNEI DARUSSALAM (FOR 5 PERSONS) -OPTION 1

JOB NO:

SHEET NO:

DRAWING NO: SBC/Q366/AFLQ/5P/RC/L - 100

REV: 2

1. GENERAL

1.1 SETTING OUT:
ALL DIMENSIONS MEASURED ON SITE SHALL BE CHECKED AND CONFIRMED WITH RELEVANT ARCHITECTURAL, M&E, CIVIL AND STRUCTURAL DRAWINGS.

1.2 ANY DISCREPANCIES BETWEEN ARCHITECTURAL, C&S AND M&E DRAWINGS SHALL BE REFERRED TO PROJECT ARCHITECT OR STRUCTURAL ENGINEER OR M&E.

1.3 PLEASE NOTE THAT THE ARCHITECTURAL DRAWINGS GRID LINE AND STRUCTURAL DRAWINGS GRID LINES HAVE BEEN PURPOSELY OFF-SET TO EASE CONSTRUCTION ON STRUCTURAL MEMBERS.

2. STANDARDS & CODE OF PRACTICE

2.1 BS 8110 : 1985 STRUCTURAL USE OF CONCRETE
2.2 PBD 12 : 2008 BUILDING GUIDELINES AND REQUIREMENTS
2.3 BS 4449 : 1978 HOT ROLLED STEEL BARS FOR THE REINFORCEMENT OF CONCRETE

3. CONCRETE

3.1 CONCRETE STRENGTH :- 25 N/mm² (GRADE 25) UNLESS OTHERWISE STATED

LEAN CONCRETE	- 15 N/mm²
PILE CAP	- 25 N/mm²
COLUMN	- 25 N/mm²
SLAB	- 25 N/mm²
BEAM	- 25 N/mm²

3.2 CONCRETE COVER TO ALL REINFORCEMENT INCLUDING LINKS SHALL MEET THE 2-HOUR FIRE RATING & AS STATED BELOW (UNLESS OTHERWISE STATED)
COLUMNS : 30mm
BEAMS : 30mm
PILE CAPS : 75mm
SLABS : 20mm

3.3 CONCRETE CURING : TO BE CARRIED OUT BY SPRAYING WITH WATER AND COVERING WITH EITHER GUNI SACKS OR PLASTIC SHEETS.

3.4 ANY COLD JOINTS AND HACKED CONCRETE SURFACE SHALL BE APPLIED WITH APPROVED BONDING AGENT BEFORE POURING NEW CONCRETE.

3.5 50mm (MINIMUM) THICK BLINDING LEAN CONCRETE SHALL BE PROVIDED BENEATH FOOTINGS, GROUND BEAMS AND ALL GROUND FLOOR SLABS SOFFIT.

4. STEEL REINFORCEMENT

4.1 THE MINIMUM YIELD STRENGTH OF STEEL REINFORCEMENT (WITH DENOTATION "T")FOR HIGH TENSILE DEFORMED BAR(TYPE 2 - 460 N/mm², STEEL FABRIC - 485 N/mm² (UNLESS OTHERWISE STATED.

4.2 THE MINIMUM YIELD STRENGTH OF STEEL REINFORCEMENT (WITH DENOTATION "R")SHALL BE 250N/mm².

5. ALL WATER RETAINING STRUCTURE OR WET AREAS SHALL BE APPLIED WITH APPROVED WATER PROOFING SYSTEM.

6. IF REQUIRED R.C LINTEL BEAM OF SIZES 150 X 200 REINFORCED WITH 2T12 (T&B) & R6 -150 LINKS SHALL BE PROVIDED TO ALL DOORS AND WINDOWS. STIFFENER, COLUMN SIZES 150X150 TO 200X200 REINFORCED WITH 4T12 & T10-150 LINKS SHALL BE PROVIDED IF REQUIRED.(FOR EG. ON WALL OF MORE THAN 3.5m IN HORIZONTAL LENGTH OR VERTICAL HEIGHT)

7. INCORPORATING OF M & E REQUIREMENTS IN STRUCTURAL DRAWINGS:
THE CONTRACTOR TO PREPARE DETAILED SHOP DRAWINGS INCORPORATING ALL M & E REQUIREMENTS, OPENINGS ETC INTO THE STRUCTURAL DRAWINGS AND OBTAIN THE PROJECT STRUCTURAL ENGINEER APPROVAL BEFORE PROCEEDING WITH ANY FORM OF PERMANENT CONSTRUCTION WORKS. THE CONTRACTOR SHALL RESOLVE ALL DISCREPANCIES WITH ENGINEERS REGARDING M & E WORKS PRIOR TO CONCRETING.

8. NOTES FOR COMPACTION WORKS OF SUB-BASE AND SUB-GRADE.

1. ALL SUB-GRADE AND SUB-BASE LAYING WORKS SHALL BE WELL COMPACTED TO OVER 95% CBR.
2. MINIMUM OF FOUR NUMBER OF DRY FIELD DENSITY TESTS AND CBR TESTS SHALL BE CONDUCTED ON COMPACTED SUBGRADES AND SUB-BASE BEFORE CARRYING OUT ANY PERMANENT WORKS SUCH AS CONCRETING OF ACCESS ROAD, GARAGE NON-SUSPENDED FLOOR SLABS & HARD STANDINGS, ETC. THE TESTS RESULTS SHALL BE SUBMITTED TO CIVIL AND STRUCTURAL CONSULTANT ENGINEER FOR REVIEW AND APPROVAL TO PROCEED WITH PERMANENT WORKS (IF APPLICABLE BASIS ONLY).

9.REMOVAL OF FORMWORK
A) THE TIME FOR THE REMOVAL OF FORMWORKS IS TO BE SUBJECTED TO ENGINEER'S APPROVAL, BUT THE FOLLOWING MAY BE TAKEN AS A GUIDE TO MINIMUM TIMES APPLICABLE UNDER NORMAL CIRCUMSTANCES:

SIDE OF COLUMNS/PIERS,WALLS AND BEAMS	3 DAYS
SOFFIT OF SLABS (PROPS LEFT UNDER)	14 DAYS
PROPS OF SLABS	28 DAYS
SOFFIT OF BEAMS (PROPS LEFT UNDER)	14 DAYS
PROPS TO SOFFIT OF BEAMS	28 DAYS

B) SHUTTERING AND CENTERING SHALL BE REMOVED BY GRADUAL EASING WITHOUT JARRING, AND ONLY IN THE PRESENCE OF A COMPETENT SUPERVISER. BEFORE REMOVAL OF THE SHUTTERING, THE CONCRETE SHALL BE EXAMINED, AND REMOVAL SHALL PROCEED ONLY IF THE CONCRETE HAS ATTAINED SUFFICIENT STRENGTH TO SUPPORT ITS OWN WEIGHT AND ANYCONSTRUCTIONAL OR OTHER LOADS LIKELY TO COME UPON IT. IF ANY LOADING IN EXCESS OF THE DESIGN LOAD IS ANTICIPATED, APPROVED PROPS SHALL BE PROVIDED AFTER REMOVAL OF SHUTTERING.

C) TO ENSURE THAT THE CONSTRUCTIONAL LOADS OF A FLOOR ARE SHARED BY AT LEAST TWO FLOORS BELOW IT, THE PROPS TO THE BEAMS AND SLABS OF A FLOOR SHALL NOT BE REMOVED UNTIL THE FLOOR ABOVE THE FLOOR IN QUESTION, IS STRONG ENOUGH TO SUPPORT ITSELF.

10. GENERAL NOTES FOR PILING WORKS

1. ALL PILES TO BE USED FOR THIS PROJECT SHALL BE OF BRUNEI DARUSSALAM MINISTRY OF DEVELOPMENT'S APPROVED TYPES AND BRAND NAMES OR AS PER S.O.'S APPROVAL.
2. THE CONTRACTOR SHALL SUBMIT TO THE ENGINEER FOR APPROVAL, BEFORE ANY PILING WORK IS STARTED, DETAILS OF :-
- PILE DRIVER INCLUDING SIZE OF HAMMER AND DROP.
- CONTRACTOR'S CALCULATIONS OF SETS, CALCULATED USING THE HILEY FORMULA.
- PROPOSED PROGRAM AND SEQUENCE OF PILE DRIVING INCLUDING TEST PILES.
3. NO PILING SHALL COMMENCE UNTIL THE SET VALUES SUBMITTED BY THE CONTRACTOR ARE APPROVED IN WRITING BY THE ENGINEER.
4. THE CALCULATED SETS SHALL ONLY BE USED AS A GUIDE FOR DRIVING AND THE SET SHALL BE CONFIRMED BY THE IN-SITU PILE TEST.
5. HOWEVER, PILE HYDRAULIC JACKING TO TWICE THE SAFE WORKING LOAD (MINIMUM) SHALL BE USED IF PILE HAMMERING ACTIVITIES CAUSES DISTURBANCES AND DISTRESS (EXCESSIVE VIBRATIONS) TO SURROUNDING BUILDINGS

11. GENERAL NOTES FOR R.C PILES

R.C PILES

1. ALL REINFORCED CONCRETE (R.C.) PRECAST PILES SHALL BE 150MM X 150MM REINFORCED CONCRETE PRECAST PILES OR AS PER SPECIFIED IN THE DRAWINGS.
2. CONCRETE GRADE SHALL BE GRADE 45 MINIMUM FOR NORMAL R.C. PRECAST PILES.
3. THE ALLOWABLE SAFE BEARING CAPACITY OF EACH R.C. PRECAST PILES POINT SHALL BE 25 TONNES.
4. THE EXPECTED PENETRATION DEPTH OF EACH PILE POINT IS 6 TO 15 METRES. THIS IS TO BE CONFIRMED DURING PILE DRIVING WORKS. (UNTIL PILE SET IS ACHIEVED UNLESS OTHERWISE STATED)
5. THE PILE SET SHOULD BE ACHIEVED WITH THE LAST 10 BLOWS FOR LESS THAN 20mm PENETRATION (PILE HAMMER OF ABOUT ONE TONNE WITH HAMMER DROP OF ABOUT 600mm TO ONE METRE)
6. ALL WELDING WORKS FOR JOINING OF PILES SHALL BE CARRIED OUT BY QUALIFIED LICENSED WELDERS.
7. IF ANY OF THE PILE POINTS DOES NOT PENETRATE 6 METRES DEEP INTO THE GROUND (IF PILE SET IS ACHIEVED AT LESS THAN 6 METRES PENETRATION LENGTH), THE CLIENT OR CONTRACTOR SHALL REPORT TO THE C&S CONSULTANT FOR REDESIGN REQUIREMENT OF THE PILE FOUNDATION.

11a. MILD STEEL TUBULAR PILING

11a.1 ALL PILES SHALL BE GRADE 43 SEAMLESS MS TUBES 114.3mm ∅ x 6.3mm THICK TO B.S. 4848 PART II WITH AN ULTIMATE LOAD CAPACITY OF NOT LESS THAN 240kN.

11a.2 ALL PILING WORK SHALL BE CARRIED OUT IN ACCORDANCE TO THE GENERAL SPECIFICATION AS SHOWN IN SPECIFICATION OF MATERIALS AND WORKMANSHIP.

12. NOTES FOR PAD FOOTING

1. ALL PAD FOOTING CONSTRUCTION SHALL BE REFERRED TO THE PAD FOOTING LAYOUT PLAN N AND DETAILS
2. THE DESIGN IS BASED UPON THE GROUND BEARING CAPACITY AT ABOUT 2.0 METRES BELOW EXISTING GROUND LEVEL TO BE 150KN/m²
3. CONCRETE GRADE 30 SHALL BE USED FOR ALL PAD FOOTING WORKS

13. NOTES FOR BAKAU PILING

1. WITH A 1/2 TONNE HAMMER AND DROP OF 900mm, THE FINAL SET SHOULD NOT BE MORE THAN 75/10 BLOWS OR THE SET TO BE FINALISED BY THE ENGINEER DURING THE TEST PILING.
2. ALL BAKAU PILES SHOULD BE NOT LESS THAN 75mm Ø (ON AVERAGE), ALL PILES CUT-OFF SHALL BE AT THE LOWEST WATER LEVEL. EXACT LEVEL TO BE DETERMINED ON SITE BY THE ENGINEER.
3. IF PILE REQUIRED TO BE SPLICED TOGETHER, A TUBULAR SPLICE WITH A HEAVY PIPE 90mm Ø x 600mm LONG x 6mm THICK SHOULD BE USED AT LEAST 4 HOLES SHALL BE PROVIDED IN THE PIPE FOR DRIVING 65mm LONG NAILS SPIKE INTO THE PILE.
4. ACTUAL SPACING OF BAKAU PILES TO BE DECIDED ON SITE.

14. NOTES FOR SAFETY OF EXISTING UNDER GROUND SERVICES

1. MAIN CONTRACTOR TO CARRY OUT PILOT TRENCHING (ADEQUATE GROUND INVESTIGATION) BEFORE CARRYING OUT ANY EXCAVATION WORKS FOR DRAINAGE WORKS, PILING WOKS AND OTHER WORKS THAT MAY AFFECT THE BURIED (UNDER GROUND) EXISTING SERVICES/UTILITIES SUCH AS ELECTRICAL CABLES, FIBRE OPTIC CABLES, TELECOM CABLES, WATER PIPES. .THIS IS IMPORTANT TO PREVENT ANY DAMAGE TO SUCH SERVICES /UTILITIES SAFETY THREAT TO ALL STATEHOLDERS.

15. NOTES FOR WATERPROOFING WORKS :

1. ALL INTERNAL OR EXTERNAL SURFACES OF WATER RETAINING STRUCTURE OR WET AREAS SUCH AS TOILETS, RC ROOF SLABS, RC GUTTERS, M&E ROOMS AND KITCHENS SHALL BE WATERPROOFED WITH APPROVED WATERPROOFING SYSTEM.
2. ALL WATERPROOFING WORKS SHALL BE CARRIED OUT BY MANUFACTURER'S APPROVED INSTALLER/APPLICATOR AND SHALL BE APPLIED IN STRICT ACCORDANCE TO THE MANUFACTURER'S APPROVED PROCEDURES OR AS PER ENGINEER'S APPROVAL.
3. SUFFICIENT CURING TIME SHALL BE ALLOWED BEFORE INSTALLATION OF ANY PROTECTIVE SCREED OR ARCHITECTURAL FINISHES.
4. WATERPROOFING SYSTEMS THAT HAS BEEN APPROVED FOR INSTALLATION SHALL CARRY A 10 YEAR WARRANTY PERIOD BY THE MANUFACTURER OR BY THE MANUFACTURER'S REPRESENTATIVES OR BY THE APPROVED LOCAL DISTRIBUTOR/APPLICATOR.

16. GENERAL NOTES FOR ANY STRUCTURAL STEEL WORKS

1. MAIN CONTRACTOR SHALL SUBMIT SHOP DRAWINGS FOR ALL STEEL WORKS FOR STRUCTURAL ENGINEER'S APPROVAL BEFORE ORDERING, PURCHASING, FABRICATING AND ERECTING ANY STEEL STRUCTURAL WORKS.
2. PROPOSED CONNECTION DETAILS TO BE PROVIDED IN THE STRUCTURAL SHOP DRAWINGS FOR STRUCTURAL ENGINEER'S APPROVAL.
3. ALL STEEL SECTION MEMBERS SHALL BE SAND BLASTED BEFORE APPLYING ANY APPROVED ANTI-CORROSION COATING SYSTEM.
4. ALL WELDING WORKS SHALL BE CARRIED OUT BY QUALIFIED LICENSED WELDERS.

17. NOTES FOR TURFING :

1. ALL TURFS SHALL BE 225MM SQUARE FROM AN APPROVED SOURCE FREE FROM LALLANG AND OTHER WEEDS.
2. BLACK EARTH OF 50MM THICKNESS SHALL BE SPREAD ON TO THE GROUND WHERE TURFING IS TO BE DONE.
3. SPOT TURFING SHALL BE LAID AT 300MM CENTRES.
4. CLOSED TURFING TO BANKS SHALL BE PEGGED IN PLACE WITH 25MM DIAMETER PEGS 225MM LONG.
5. ALL TURFING SHALL BE WATERED UNTIL SATISFACTORILY ESTABLISHED AND ALL TURFING THAT HAS BECOME DEFECTIVE WITHIN SIX MONTHS SHALL BE REPLACED AT THE CONTRACTOR'S EXPENSE.
6. DURING THE PERIOD OF THE WORKS AND MAINTENANCE, THE CONTRACTOR SHALL KEEP ALL TURFED AREAS WATERED, MOWN OR CUT AND CLEARED OF GRASS CUTTING TO THE SATISFACTION OF THE ENGINEER. THE FIRST CUT SHALL BE MADE WHEN THE GRASS IS 100MM HIGH, FOLLOWED BY REGULAR CUTTING SO THAT THE VEGETATION AT NO TIME EXCEEDS 150MM IN HEIGHT.

18. DRAWING NOTE:

1. ALL STRUCTURAL DRAWING ARE DRAWN TO APPROXIMATE SCALE. ANY DISCREPANCY IN STRUCTURAL DRAWING DIMENSIONS, EXACT DIMENSION SHALL BE REFERRED TO STRUCTURAL ENGINEER.

19. GENERAL NOTES FOR FLOOR HARDENER REQUIREMENTS:

1. ALL CONCRETE SLAB SURFACES WHICH ARE NOT COVERED WITH HEAVY DUTY DECORATIVE TILES AND TO BE USED AS CAR PARKS OR ACCESS ROADS (FOR SELECTED AREAS) SHALL BE APPLIED WITH SUITABLE FLOOR HARDENERS SYSTEM (TO INCLUDE POWER FLOAT TROWELLING IF APPLICABLE)

20. GENERAL NOTES FOR BRICKWALL WORKS:

1. ALL BRICKS TO BE USED SHALL BE REGULAR IN SIZE AND APPROVED BY ABCi
2. REINFORCED CONCRETE STIFFENERS (100x100 WITH APPROPRIATE REINFORCEMENTS)SHALL BE PROVIDED AT EVERY INTERVAL OF 3.5m OF BRICK WORK LENGTH

21. NOTES FOR WORKPLACE SAFETY, HEALTH AND ENVIRONMENT COMPLIANCE & INSURANCES & TEMPORARY WORKS:

1. MAIN CONTRACTOR SHALL ENSURE TO COMPLY FULLY WITH ALL PREVAILING RULES, REGULATIONS AND LAWS OF NEGARA BRUNEI DARUSSALAM ON WORKPLACE SAFETY, HEALTH AND ENVIRONMENTAL ASPECTS THROUGHOUT THE DURATION OF THE CONSTRUCTION PERIOD AND DEFECTS LIABILITY PERIOD
2. MAIN CONTRACTOR SHALL ENSURE THAT ALL APPLICABLE INSURANCES ARE VALID THROUGHOUT THE CONSTRUCTION PERIOD AND DEFECTS LIABILITY PERIOD SUCH AS CONTRACTOR'S ALL RISK INSURANCE OR OTHERS SUCH AS WORKMEN COMPENSATION INSURANCE POLICY, PUBLIC LIABILITY INSURANCE POLICY AND FIRE INSURANCE POLICY(WHICHEVER IS APPLICABLE AS PER SUPERINTENDING OFFICERS INSTRUCTIONS)
3. MAIN CONTRACTOR SHALL EMPLOY INDEPENDENT CONSULTANT TO CARRYOUT DESIGN WORKS FOR ALL TEMPORARY WORKS AND THAT SUCH TEMPORARY WORKS DESIGN REQUIREMENT ARE FULLY COMPLIED DURING ITS EXECUTION

22. NOTES FOR ROOF TRUSSES:

1. ROOF TRUSSES SHALL BE LIGHTWEIGHT PROPRIETARY SYSTEM SUCH AS LYSAGTH SMART TRUSS SYSTEM OR APPROVED TECHNICAL EQUIVALENT SHALL BE DESIGNED BY MANUFACTURER COMPANY.
2. THE INSTALLATION WORKS SHALL BE CARRIED OUT BY MANUFACTURER'S APPROVED INSTALLER.

SERI BUMI CONSULTANT
Unit 14, 2nd Flr, Blk. A, Gadong Central, Spg. 21, Gadong
BRUNEI

(sbc)
SERI BUMI CONSULTANT
CIVIL & STRUCTURAL ENGINEERING CONSULTANT
No: 14, 2nd FLOOR, BLOCK A, GADONG CENTRAL, SIMPANG 21, JALAN GADONG, BSB, BRUNEI DARUSSALAM
TEL: 673-2427275 FAX: 673-2427279
E-MAIL: sbc.brunei@gmail.com

CLIENT:

NO.	AMENDMENTS	BY	DATE

DESIGNED BY	THAN ZAW TUN	
DRAWN BY	SAI	
CHECKED BY	MD. YUNUS	
APPROVED BY		DATE 13/09/2022

SCALE: N.T.S

TITLE: GENERAL NOTES

PROJECT: PROPOSED NEW 1 UNIT STANDARD DESIGN OF FARM LABOUR QUARTERS, BRUNEI DARUSSALAM (FOR 5 PERSONS) -OPTION 1

JOB NO:

SHEET NO:

DRAWING NO: SBC/Q366/AFLQ/5P/RC/G - 100

REV:

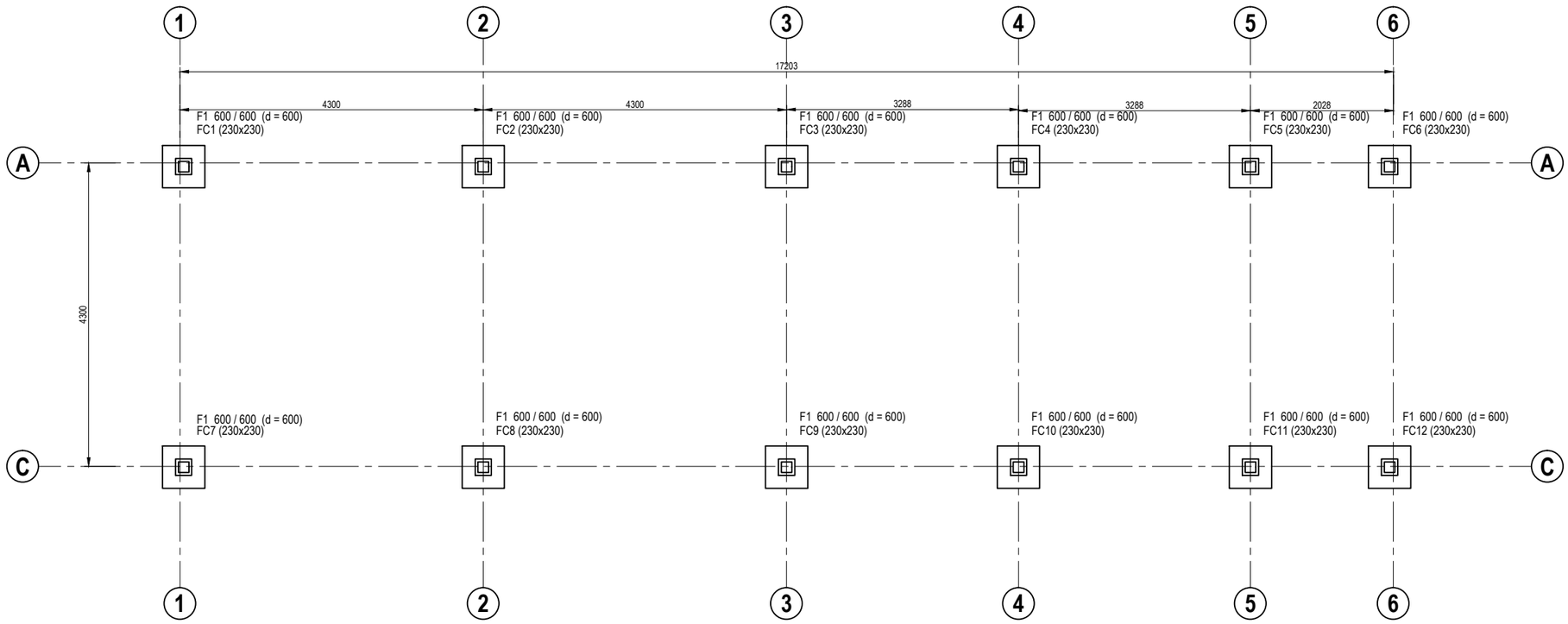

150x150mm R.C PRECAST PILE FOUNDATION LAYOUT PLAN

SCALE 1 : 75

F1 600 / 600 (d = 600)

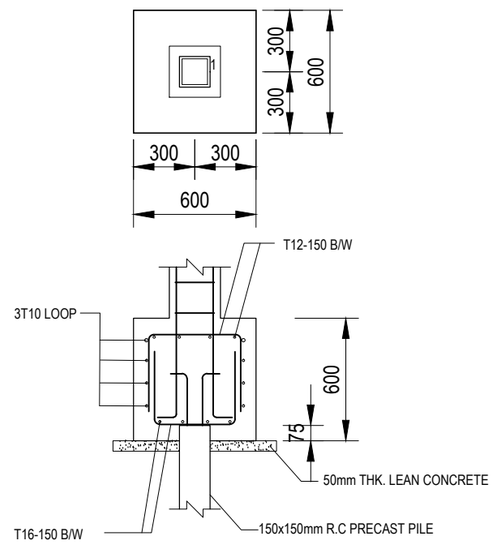

SERI BUMI CONSULTANT
Unit 14, 2nd Flr, Blk. A, Gadong Central, Spg. 21, Gadong
BRUNEI

SERI BUMI CONSULTANT
CIVIL & STRUCTURAL ENGINEERING CONSULTANT
No: 14, 2nd FLOOR, BLOCK A, GADONG CENTRAL, SIMPANG 21, JALAN GADONG, BSB, BRUNEI DARUSSALAM
TEL: 673-2427275 FAX: 673-2427279
E-MAIL: sbc.brunei@gmail.com

CLIENT:

NO.	AMENDMENTS	BY	DATE

DESIGNED BY	THAN ZAW TUN	
DRAWN BY	SAI	
CHECKED BY	MD. YUNUS	
APPROVED BY		DATE 13/09/2022

SCALE: 1:75

TITLE: 125x125mm R.C PRECAST PILE FOUNDATION LAYOUT PLAN

PROJECT: PROPOSED NEW 1 UNIT STANDARD DESIGN OF FARM LABOUR QUARTERS, BRUNEI DARUSSALAM (FOR 5 PERSONS) -OPTION 1

JOB NO:

SHEET NO:

DRAWING NO: SBC/Q366/AFLQ/5P/RC/CS - 100

REV:

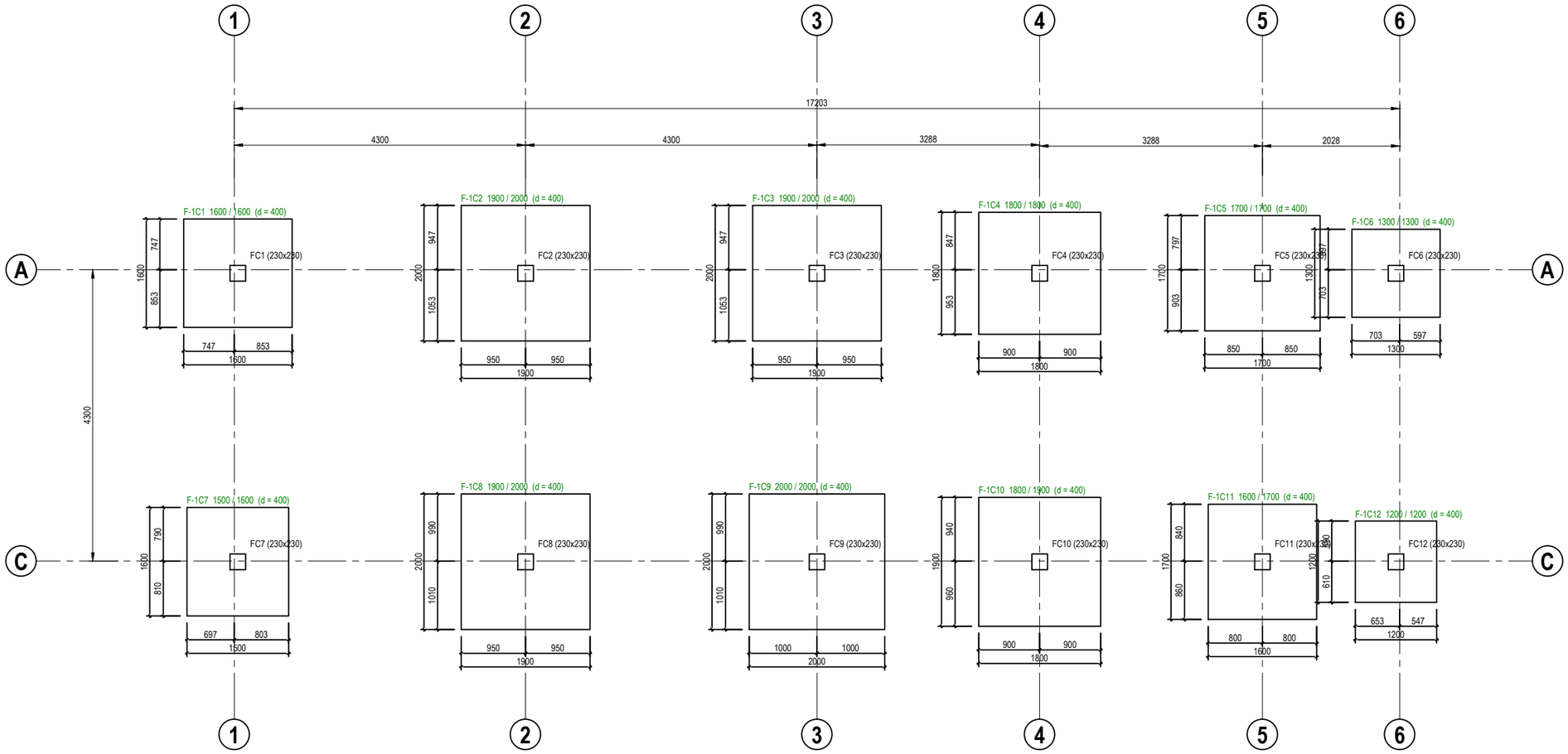

PAD FOOTING FOUNDATION LAYOUT PLAN [ALLOWABLE STRESS OF SOIL 100 KN/m²]

SCALE 1 : 75

SERI BUMI CONSULTANT
Unit 14,
2nd Flr, Blk. A,
Gadong Central,
Spg. 21, Gadong
BRUNEI

(sbc)
SERI BUMI CONSULTANT
CIVIL & STRUCTURAL ENGINEERING CONSULTANT
No: 14, 2nd FLOOR, BLOCK A, GADONG CENTRAL, SIMPANG 21, JALAN GADONG, BSB, BRUNEI DARUSSALAM
TEL: 673-2427275 FAX: 673-2427279
E-MAIL: sbc.brunei@gmail.com

CLIENT:

NO.	AMENDMENTS	BY	DATE

DESIGNED BY	THAN ZAW TUN	
DRAWN BY	SAI	
CHECKED BY	MD. YUNUS	
APPROVED BY		DATE 13/09/2022

SCALE: 1:75

TITLE: PAD FOOTING FOUNDATION LAYOUT PLAN [ALLOWABLE STRESS OF SOIL 100KN/m²]

PROJECT: PROPOSED NEW 1 UNIT STANDARD DESIGN OF FARM LABOUR QUARTERS, BRUNEI DARUSSALAM (FOR 5 PERSONS) -OPTION 1

JOB NO:

SHEET NO:

DRAWING NO: SBC/Q366/AFLQ/5P/RC/CS - 101

REV:

F-1C1 1600 / 1600 (d = 400)

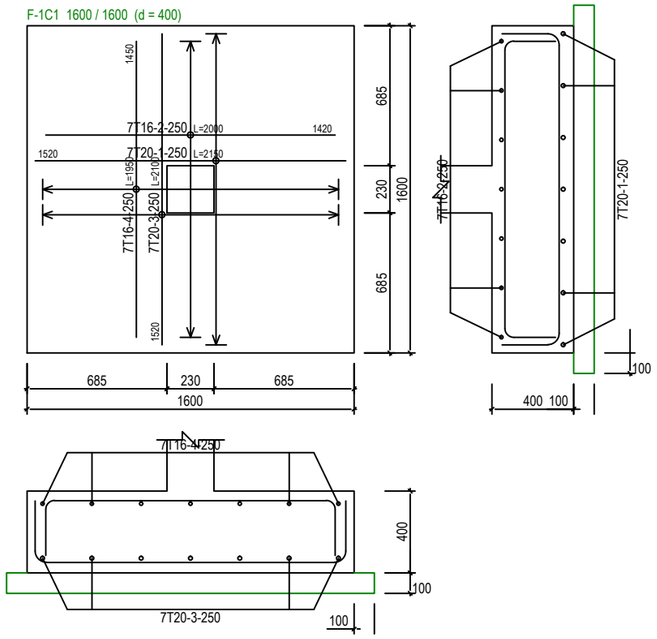

F-1C7 1500 / 1600 (d = 400)

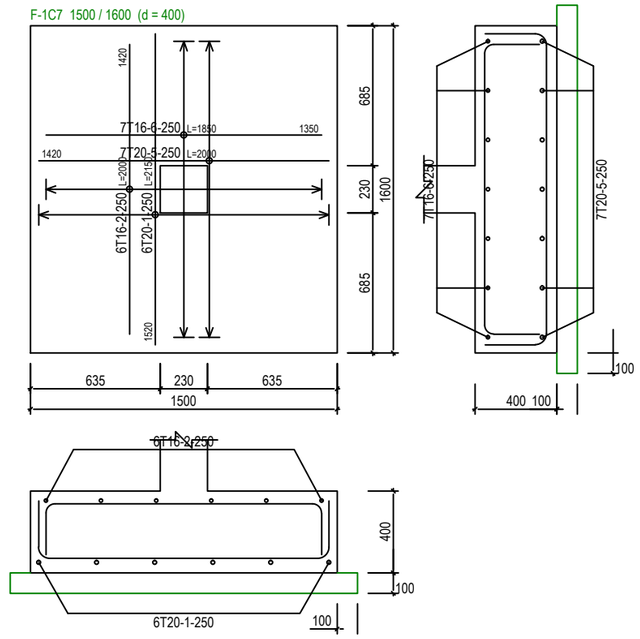

F-1C3 1900 / 2000 (d = 400)

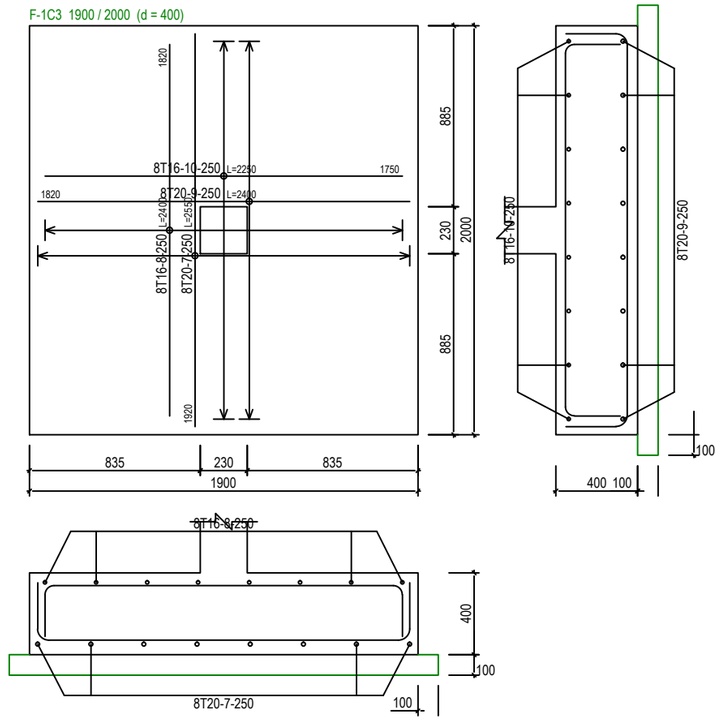

F-1C12 1200 / 1200 (d = 400)

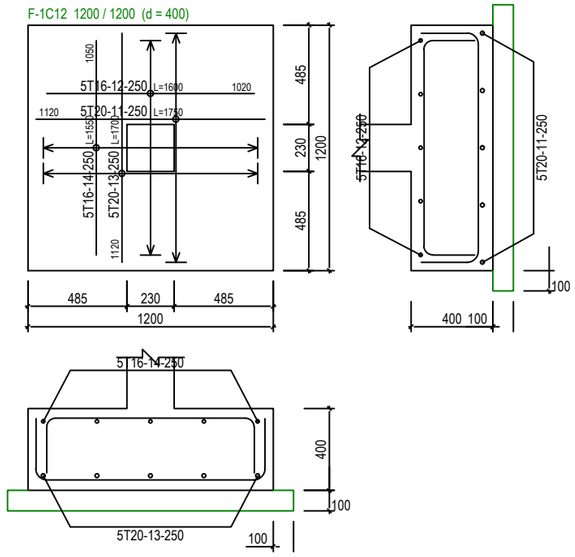

F-1C5 1700 / 1700 (d = 400)

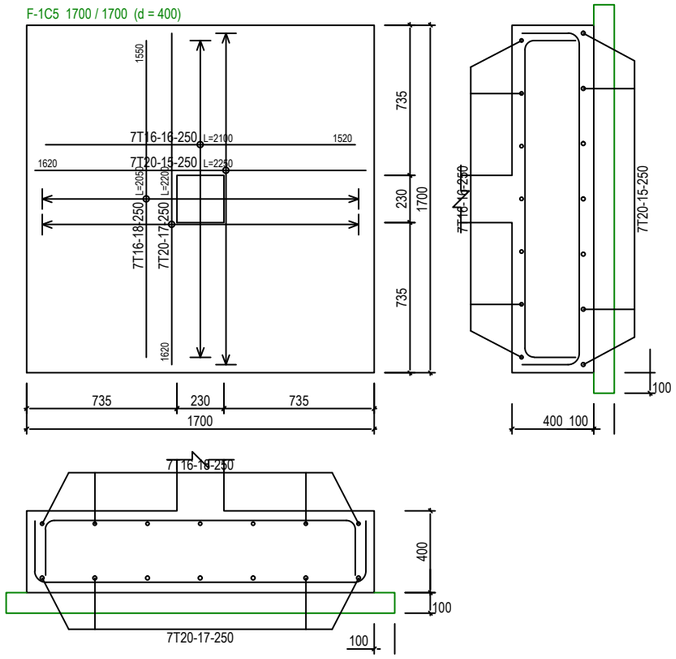

F-1C4 1800 / 1800 (d = 400)

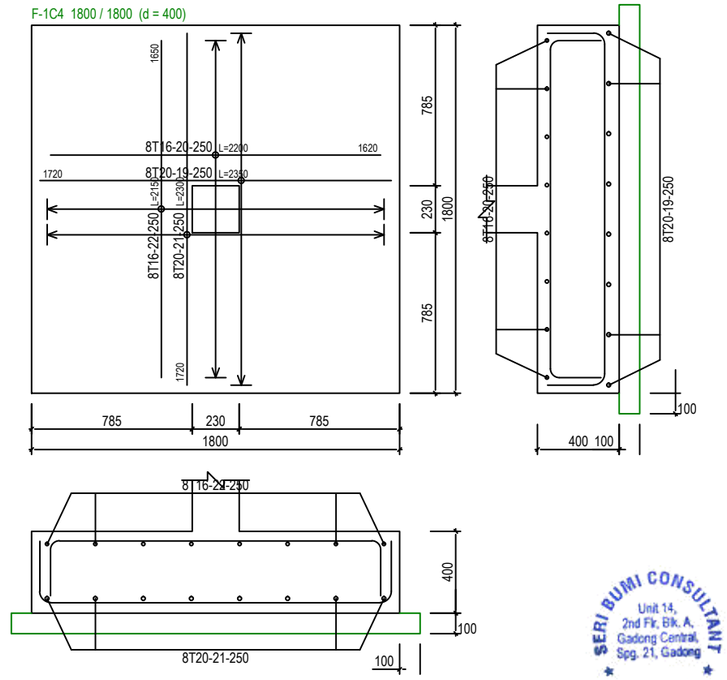

PAD FOOTING DETAILS - 1 [ALLOWABLE STRESS OF SOIL 100 KN/m²]

SCALE 1:30

SERI BUMI CONSULTANT Unit 14, 2nd Flr, Blk. A, Gadong Central, Spg. 21, Gadong BRUNEI

(sbc) SERI BUMI CONSULTANT
CIVIL & STRUCTURAL ENGINEERING CONSULTANT
No: 14, 2nd FLOOR, BLOCK A, GADONG CENTRAL, SIMPANG 21, JALAN GADONG, BSB, BRUNEI DARUSSALAM
TEL: 673-2427275 FAX: 673-2427279
E-MAIL: sbc.brunei@gmail.com

CLIENT:

NO.	AMENDMENTS	BY	DATE

DESIGNED BY	THAN ZAW TUN	
DRAWN BY	SAI	
CHECKED BY	MD. YUNUS	
APPROVED BY		DATE 13/09/2022

SCALE: 1:30

TITLE: PAD FOOTING DETAILS - 1 [ALLOWABLE STRESS OF SOIL 100KN/m²]

PROJECT: PROPOSED NEW 1 UNIT STANDARD DESIGN OF FARM LABOUR QUARTERS, BRUNEI DARUSSALAM (FOR 5 PERSONS) -OPTION 1

JOB NO:

SHEET NO:

DRAWING NO: SBC/Q366/AFLQ/5P/RC/CS - 101A

REV:

F-1C11 1600 / 1700 (d = 400)

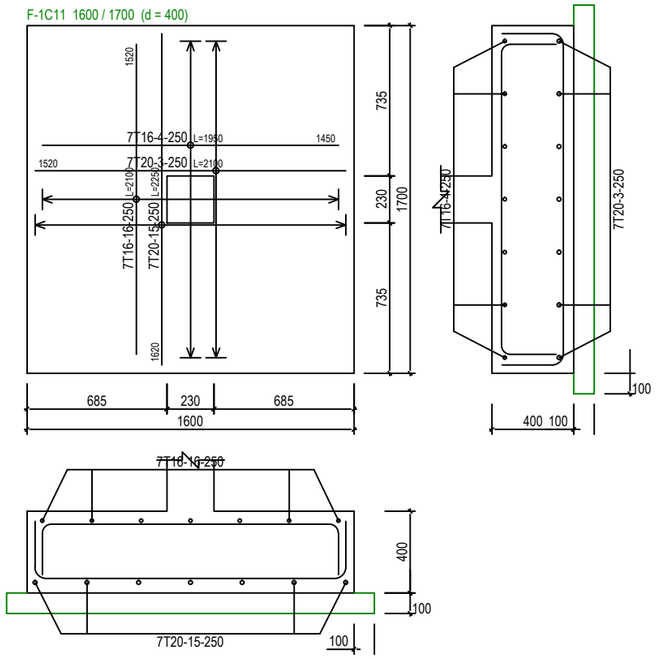

F-1C8 1900 / 2000 (d = 400)

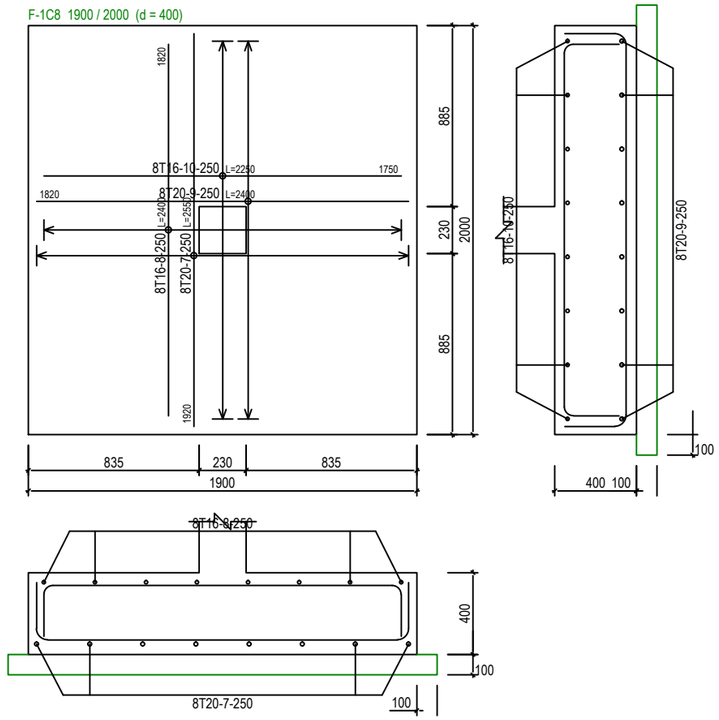

F-1C2 1900 / 2000 (d = 400)

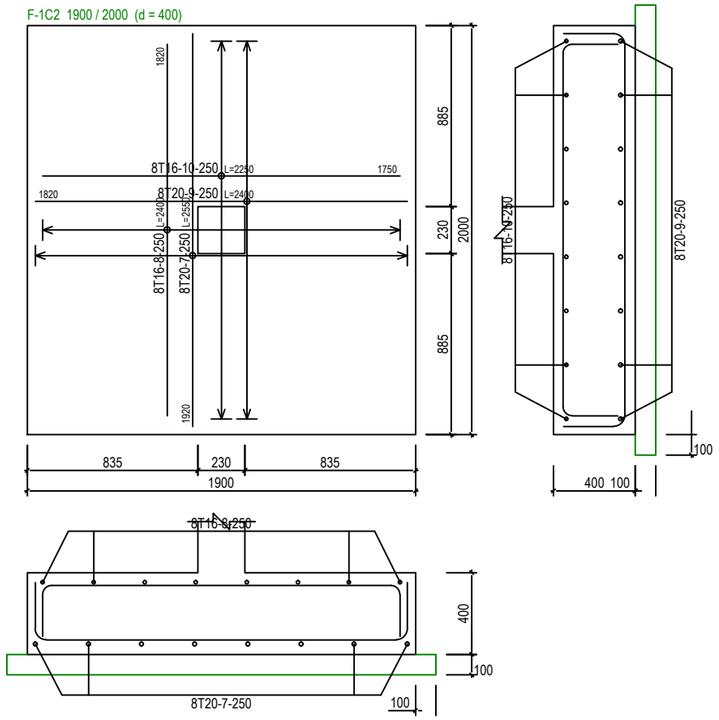

F-1C6 1300 / 1300 (d = 400)

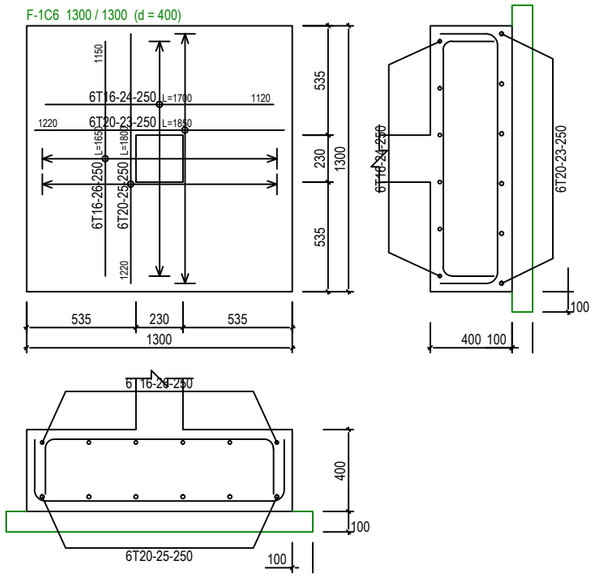

F-1C10 1800 / 1900 (d = 400)

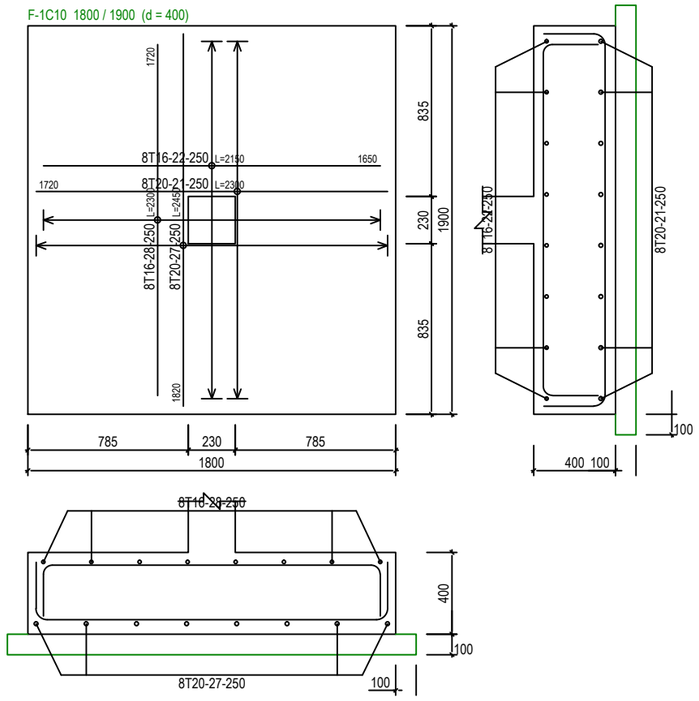

F-1C9 2000 / 2000 (d = 400)

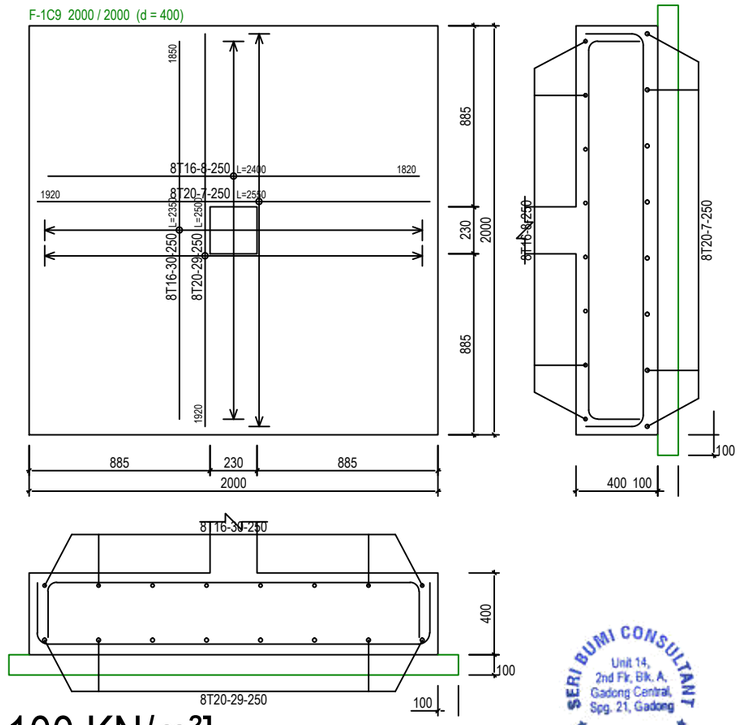

PAD FOOTING DETAILS - 2 [ALLOWABLE STRESS OF SOIL 100 KN/m²]

SCALE 1:30

SERI BUMI CONSULTANT
Unit 14, 2nd Flr, Blk. A, Gadong Central, Spg. 21, Gadong
BRUNEI

(sbc)
SERI BUMI CONSULTANT
CIVIL & STRUCTURAL ENGINEERING CONSULTANT
No: 14, 2nd FLOOR, BLOCK A, GADONG CENTRAL, SIMPANG 21, JALAN GADONG, BSB, BRUNEI DARUSSALAM
TEL: 673-2427275 FAX: 673-2427279
E-MAIL: sbc.brunei@gmail.com

CLIENT:

NO.	AMENDMENTS	BY	DATE

DESIGNED BY	THAN ZAW TUN		
DRAWN BY	SAI		
CHECKED BY	MD. YUNUS		
APPROVED BY		DATE	13/09/2022

SCALE: 1:30

TITLE: PAD FOOTING DETAILS - 2 [ALLOWABLE STRESS OF SOIL 100KN/m²]

PROJECT: PROPOSED NEW 1 UNIT STANDARD DESIGN OF FARM LABOUR QUARTERS, BRUNEI DARUSSALAM (FOR 5 PERSONS) -OPTION 1

JOB NO:

SHEET NO:

DRAWING NO: SBC/Q366/AFLQ/5P/RC/CS - 101B

REV:

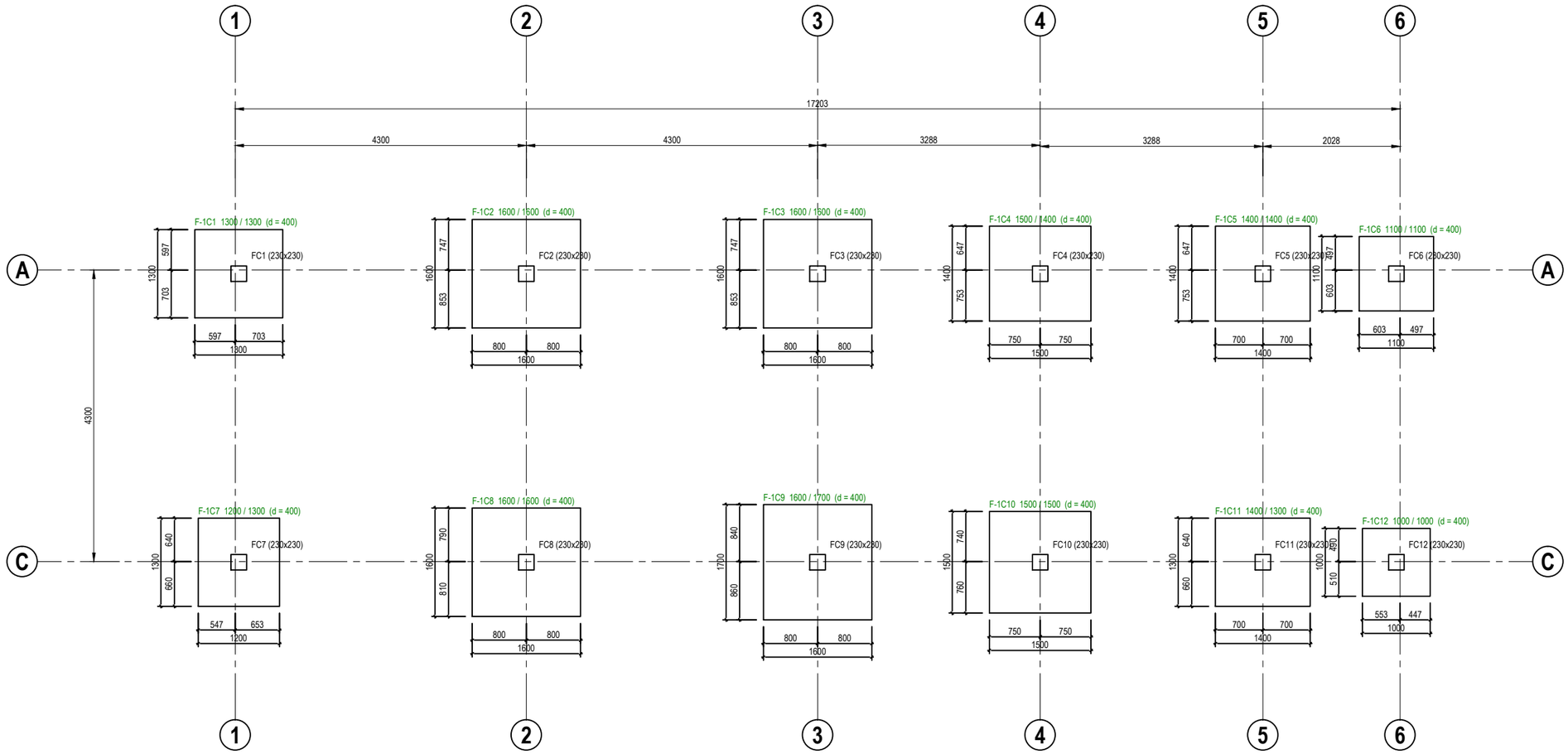

PAD FOOTING FOUNDATION LAYOUT PLAN [ALLOWABLE STRESS OF SOIL 150 KN/m²]

SCALE 1 : 75

SERI BUMI CONSULTANT
Unit 14, 2nd Flr, Blk. A, Gadong Central, Spg. 21, Gadong
BRUNEI

(sbc)
SERI BUMI CONSULTANT
CIVIL & STRUCTURAL ENGINEERING CONSULTANT
No: 14, 2nd FLOOR, BLOCK A, GADONG CENTRAL, SIMPANG 21, JALAN GADONG, BSB, BRUNEI DARUSSALAM
TEL: 673-2427275 FAX: 673-2427279
E-MAIL: sbc.brunei@gmail.com

CLIENT:

NO.	AMENDMENTS	BY	DATE

DESIGNED BY	THAN ZAW TUN	
DRAWN BY	SAI	
CHECKED BY	MD. YUNUS	
APPROVED BY		DATE 13/09/2022

SCALE: 1:75

TITLE: PAD FOOTING FOUNDATION LAYOUT PLAN [ALLOWABLE STRESS OF SOIL 150KN/m²]

PROJECT: PROPOSED NEW 1 UNIT STANDARD DESIGN OF FARM LABOUR QUARTERS, BRUNEI DARUSSALAM (FOR 5 PERSONS) -OPTION 1

JOB NO:

SHEET NO:

DRAWING NO: SBC/Q366/AFLQ/5P/RC/CS - 102

REV:

F-1C1 1300 / 1300 (d = 400)

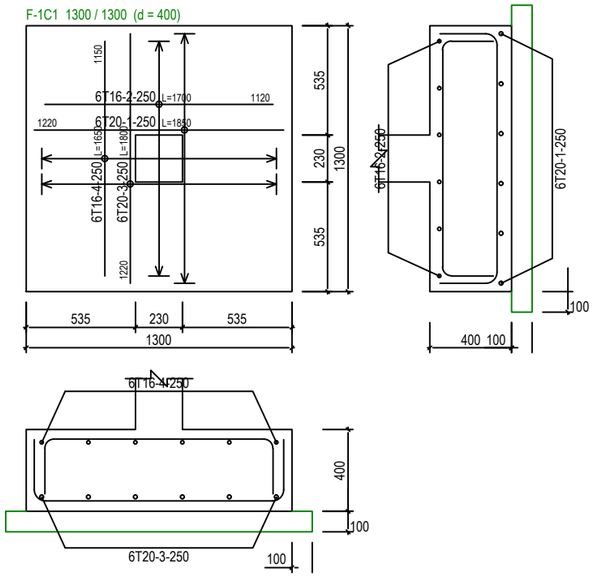

F-1C7 1200 / 1300 (d = 400)

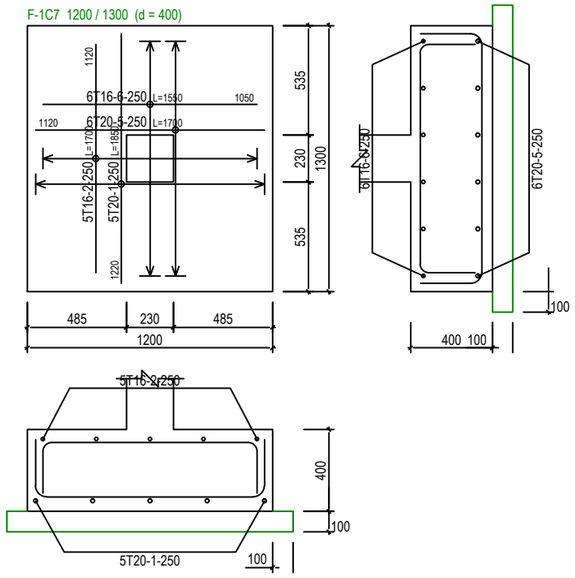

F-1C3 1600 / 1600 (d = 400)

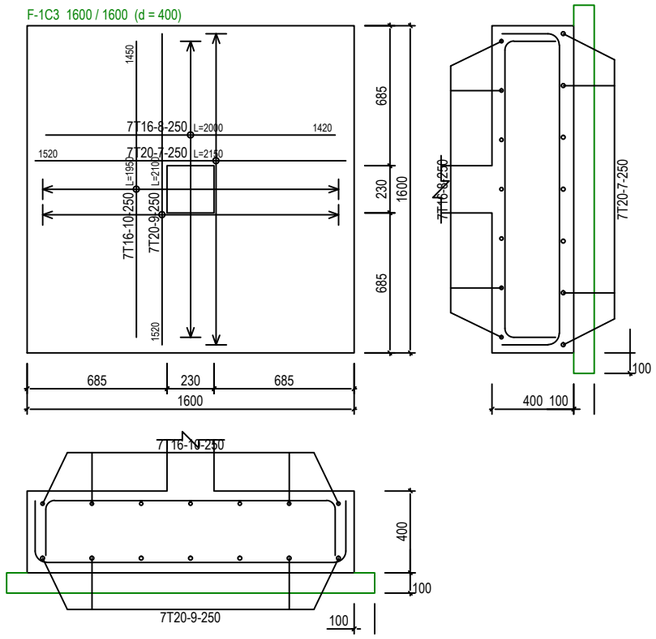

F-1C11 1400 / 1300 (d = 400)

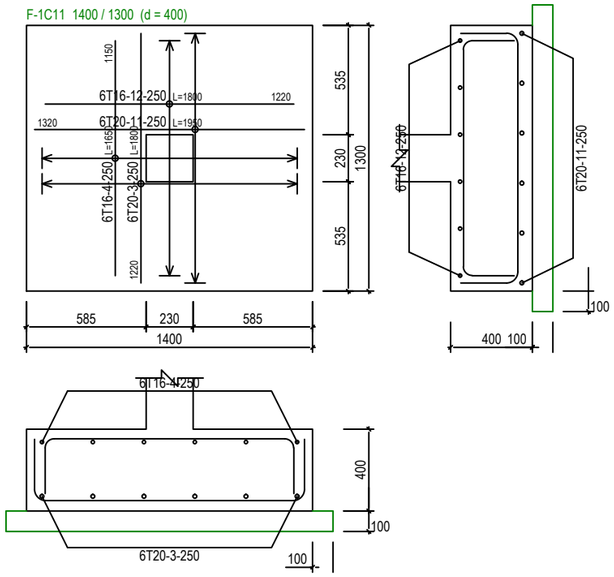

F-1C8 1600 / 1600 (d = 400)

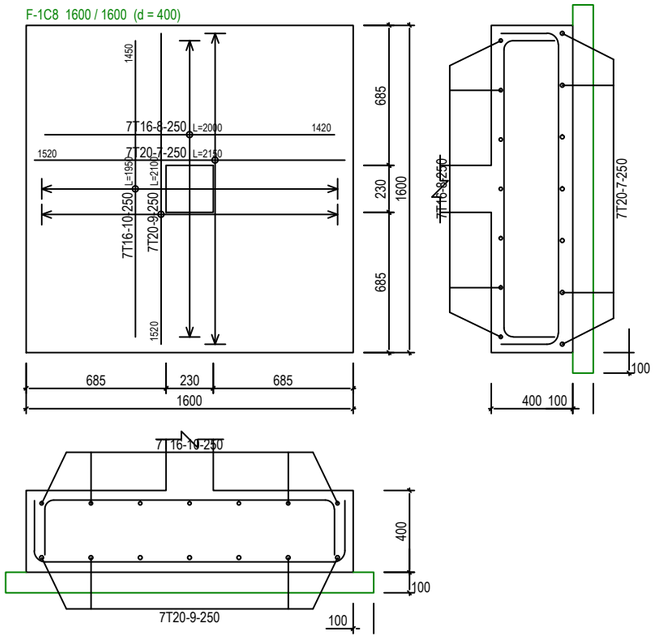

F-1C9 1600 / 1700 (d = 400)

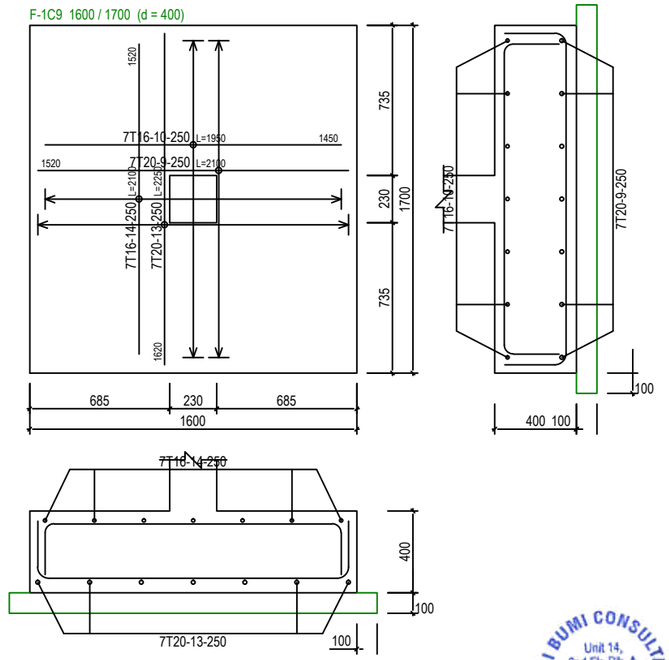

PAD FOOTING DETAILS - 1 [ALLOWABLE STRESS OF SOIL 150 KN/m²]

SCALE 1:30

SERI BUMI CONSULTANT
Unit 14, 2nd Flr, Blk. A, Gadong Central, Spg. 21, Gadong
BRUNEI

(sbc)
SERI BUMI CONSULTANT
CIVIL & STRUCTURAL ENGINEERING CONSULTANT
No: 14, 2nd FLOOR, BLOCK A, GADONG CENTRAL, SIMPANG 21, JALAN GADONG, BSB, BRUNEI DARUSSALAM
TEL: 673-2427275 FAX: 673-2427279
E-MAIL: sbc.brunei@gmail.com

CLIENT:

NO.	AMENDMENTS	BY	DATE

DESIGNED BY	THAN ZAW TUN	
DRAWN BY	SAI	
CHECKED BY	MD. YUNUS	
APPROVED BY		DATE 13/09/2022

SCALE: 1:30

TITLE: PAD FOOTING DETAILS - 1 [ALLOWABLE STRESS OF SOIL 150KN/m²]

PROJECT: PROPOSED NEW 1 UNIT STANDARD DESIGN OF FARM LABOUR QUARTERS, BRUNEI DARUSSALAM (FOR 5 PERSONS) -OPTION 1

JOB NO:

SHEET NO:

DRAWING NO: SBC/Q366/AFLQ/5P/RC/CS - 102A

REV:

F-1C10 1500 / 1500 (d = 400)

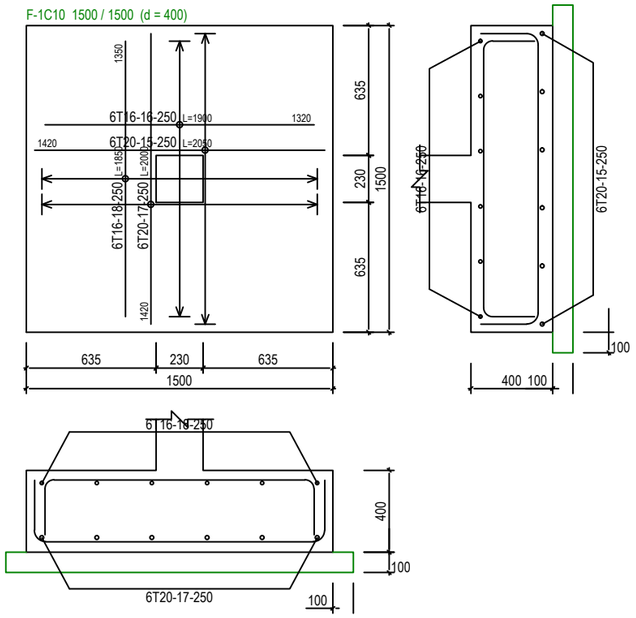

F-1C12 1000 / 1000 (d = 400)

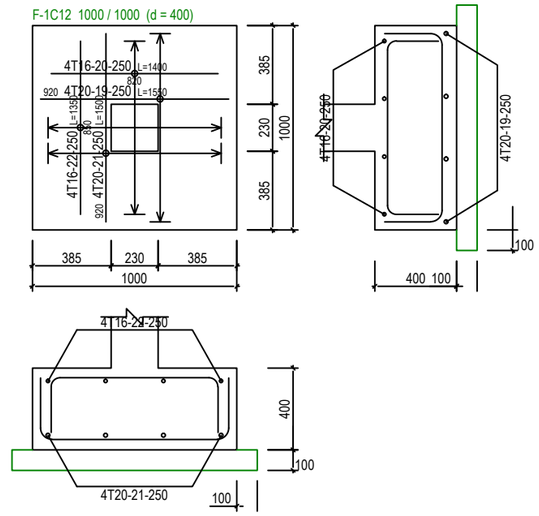

F-1C4 1500 / 1400 (d = 400)

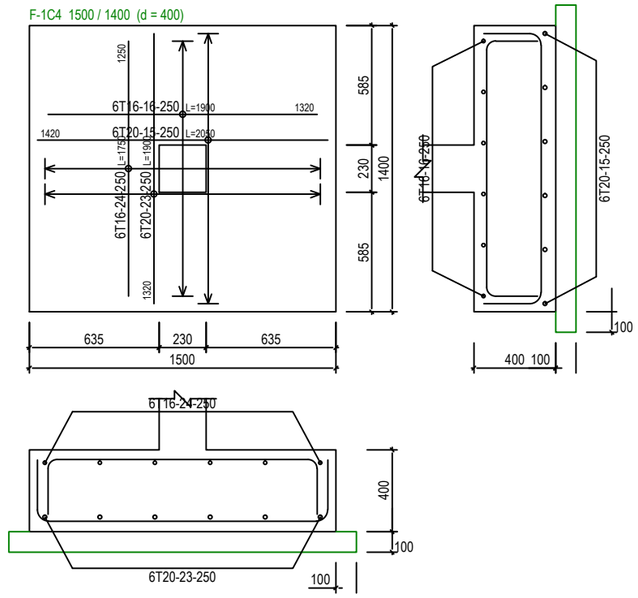

F-1C2 1600 / 1600 (d = 400)

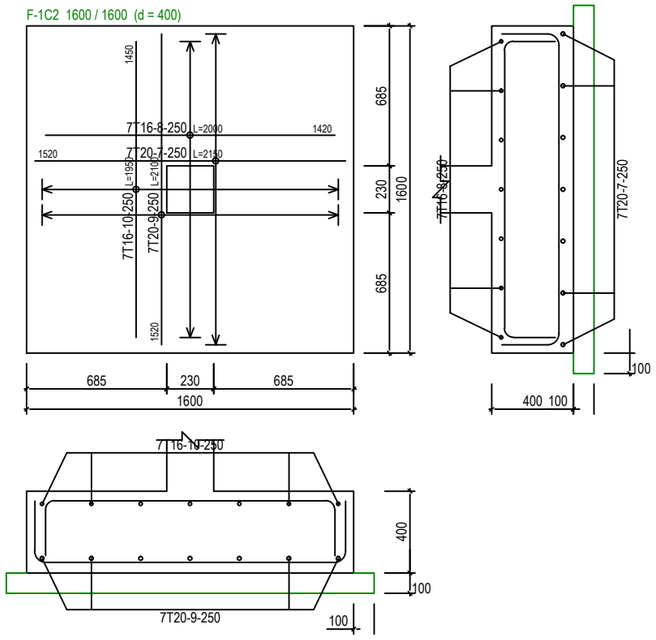

F-1C5 1400 / 1400 (d = 400)

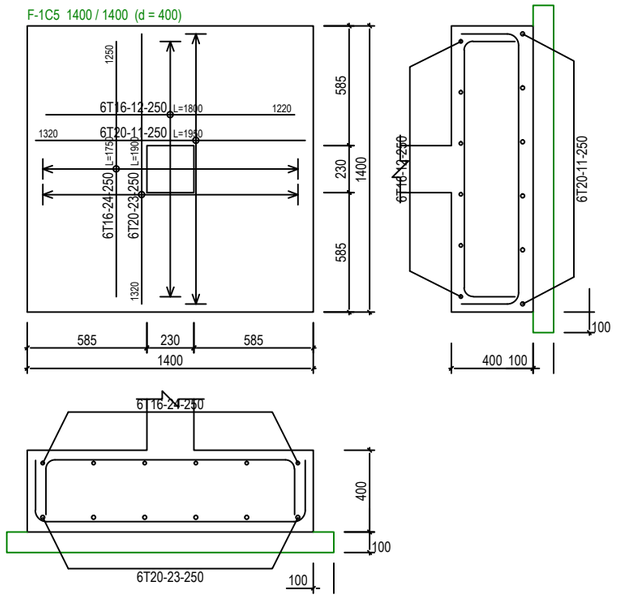

F-1C6 1100 / 1100 (d = 400)

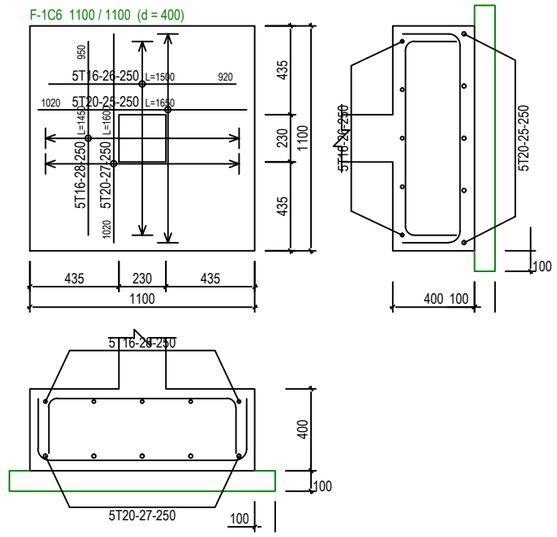

PAD FOOTING DETAILS - 2 [ALLOWABLE STRESS OF SOIL 150 KN/m²]

SCALE 1:30

SERI BUMI CONSULTANT
Unit 14, 2nd Flr, Blk. A, Gadong Central, Spg. 21, Gadong
BRUNEI

(sbc)
SERI BUMI CONSULTANT
CIVIL & STRUCTURAL ENGINEERING CONSULTANT
No: 14, 2nd FLOOR, BLOCK A, GADONG CENTRAL, SIMPANG 21, JALAN GADONG, BSB, BRUNEI DARUSSALAM
TEL: 673-2427275 FAX: 673-2427279
E-MAIL: sbc.brunei@gmail.com

CLIENT:

NO.	AMENDMENTS	BY	DATE

DESIGNED BY	THAN ZAW TUN	
DRAWN BY	SAI	
CHECKED BY	MD. YUNUS	
APPROVED BY		DATE 13/09/2022

SCALE: 1:30

TITLE: PAD FOOTING DETAILS - 2 [ALLOWABLE STRESS OF SOIL 150KN/m²]

PROJECT: PROPOSED NEW 1 UNIT STANDARD DESIGN OF FARM LABOUR QUARTERS, BRUNEI DARUSSALAM (FOR 5 PERSONS) -OPTION 1

JOB NO:

SHEET NO:

DRAWING NO: SBC/Q366/AFLQ/5P/RC/CS - 102B

REV:

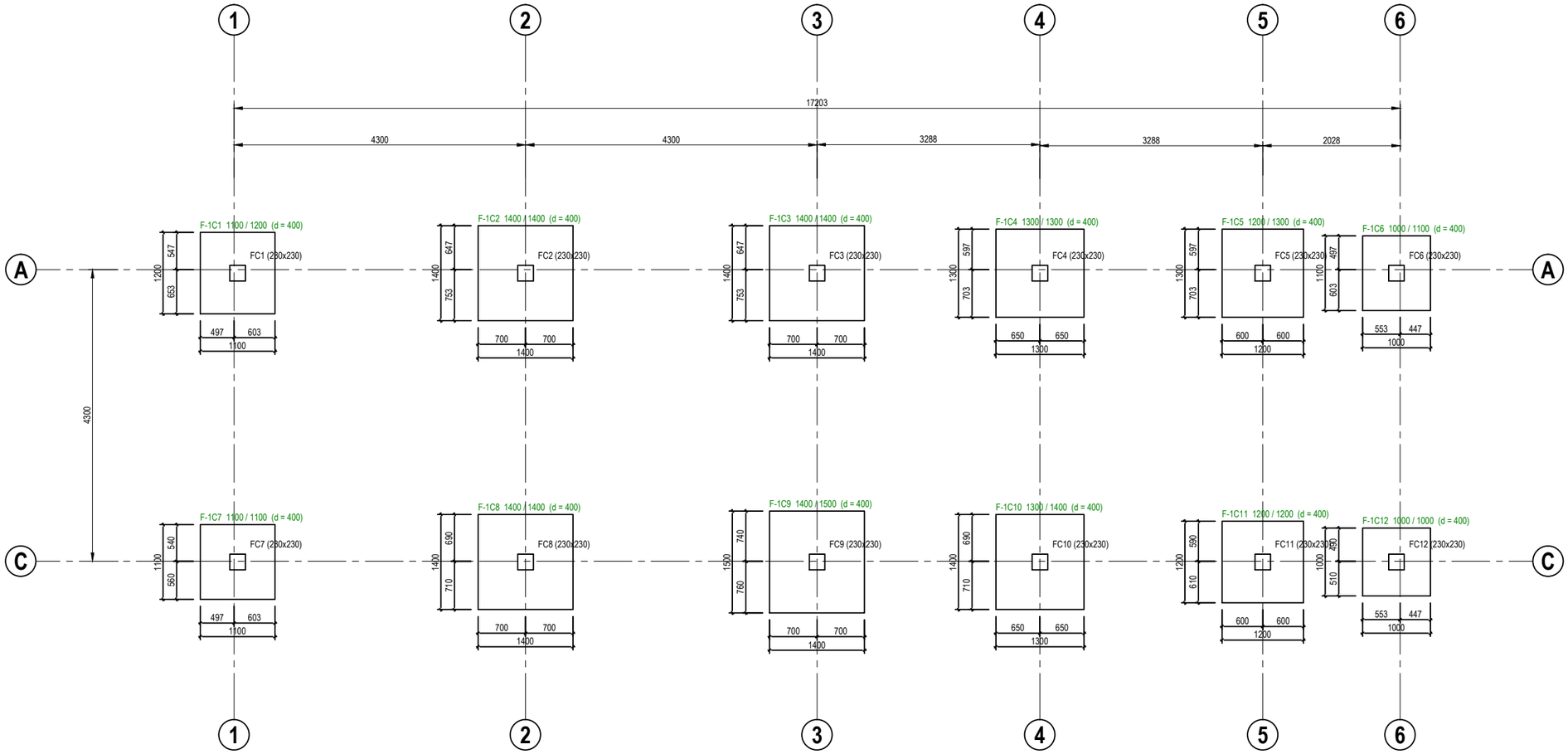

PAD FOOTING FOUNDATION LAYOUT PLAN [ALLOWABLE STRESS OF SOIL 200 KN/m²]

SCALE 1 : 75

SERI BUMI CONSULTANT
Unit 14,
2nd Flr, Blk. A,
Gadong Central,
Spg. 21, Gadong
BRUNEI

(sbc)
SERI BUMI CONSULTANT
CIVIL & STRUCTURAL ENGINEERING CONSULTANT
No: 14, 2nd FLOOR, BLOCK A, GADONG CENTRAL, SIMPANG 21, JALAN GADONG, BSB, BRUNEI DARUSSALAM
TEL: 673-2427275 FAX: 673-2427279
E-MAIL: sbc.brunei@gmail.com

CLIENT:

NO.	AMENDMENTS	BY	DATE

DESIGNED BY	THAN ZAW TUN		
DRAWN BY	SAI		
CHECKED BY	MD. YUNUS		
APPROVED BY		DATE	13/09/2022

SCALE: 1:75

TITLE: PAD FOOTING FOUNDATION LAYOUT PLAN [ALLOWABLE STRESS OF SOIL 200KN/m²]

PROJECT: PROPOSED NEW 1 UNIT STANDARD DESIGN OF FARM LABOUR QUARTERS, BRUNEI DARUSSALAM (FOR 5 PERSONS) -OPTION 1

JOB NO:

SHEET NO:

DRAWING NO: SBC/Q366/AFLQ/5P/RC/CS - 103

REV:

F-1C3 1400 / 1400 (d = 400)

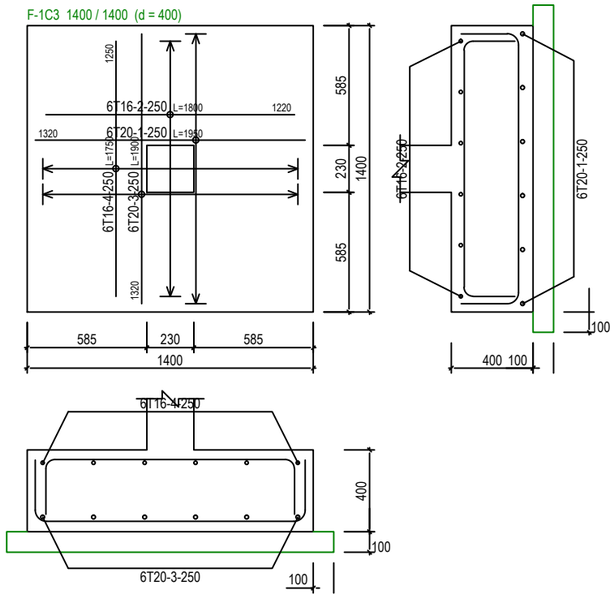

F-1C6 1000 / 1100 (d = 400)

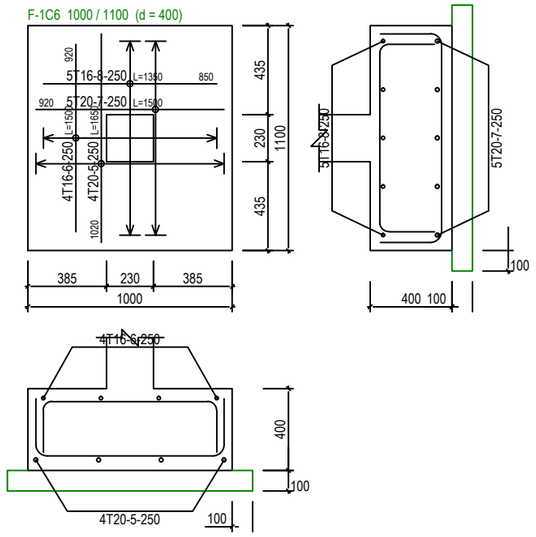

F-1C5 1200 / 1300 (d = 400)

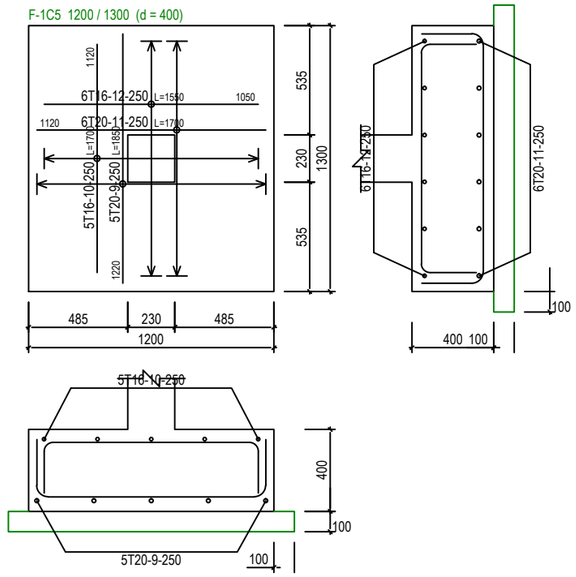

F-1C7 1100 / 1100 (d = 400)

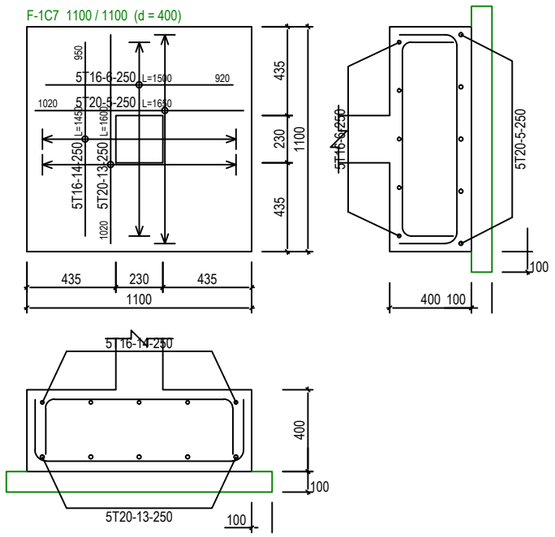

F-1C8 1400 / 1400 (d = 400)

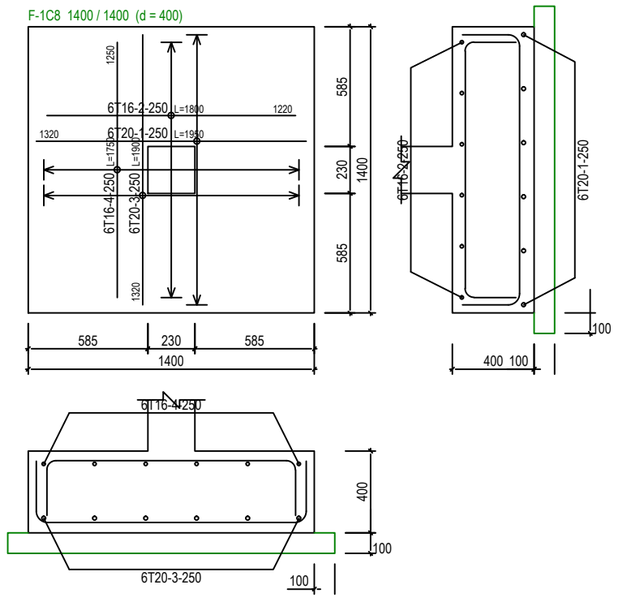

F-1C9 1400 / 1500 (d = 400)

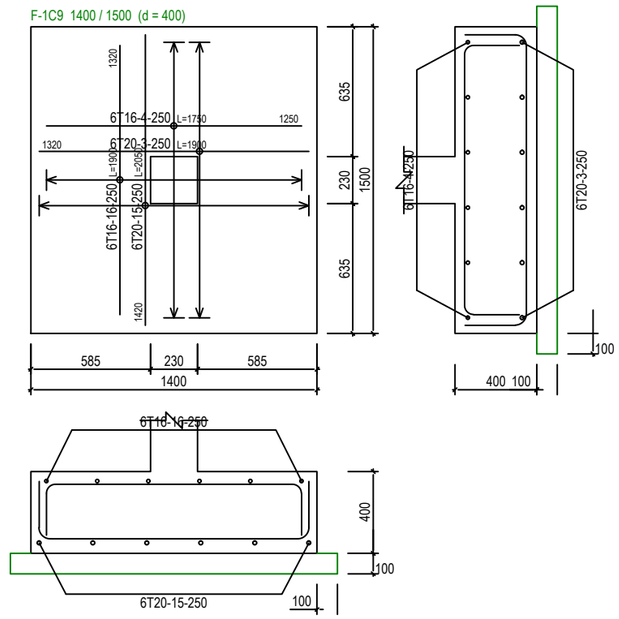

PAD FOOTING DETAILS - 1 [ALLOWABLE STRESS OF SOIL 200 KN/m²]

SCALE 1:30

SERI BUMI CONSULTANT
Unit 14, 2nd Flr, Blk. A, Gadong Central, Spg. 21, Gadong
BRUNEI

(sbc)
SERI BUMI CONSULTANT
CIVIL & STRUCTURAL ENGINEERING CONSULTANT
No: 14, 2nd FLOOR, BLOCK A, GADONG CENTRAL, SIMPANG 21, JALAN GADONG, BSB, BRUNEI DARUSSALAM
TEL: 673-2427275 FAX: 673-2427279
E-MAIL: sbc.brunei@gmail.com

CLIENT:

NO.	AMENDMENTS	BY	DATE

DESIGNED BY	THAN ZAW TUN	
DRAWN BY	SAI	
CHECKED BY	MD. YUNUS	
APPROVED BY		DATE 13/09/2022

SCALE: 1:30

TITLE: PAD FOOTING DETAILS - 1 [ALLOWABLE STRESS OF SOIL 200KN/m²]

PROJECT: PROPOSED NEW 1 UNIT STANDARD DESIGN OF FARM LABOUR QUARTERS, BRUNEI DARUSSALAM (FOR 5 PERSONS) -OPTION 1

JOB NO:

SHEET NO:

DRAWING NO: SBC/Q366/AFLQ/5P/RC/CS - 103A

REV:

F-1C1 1100 / 1200 (d = 400)

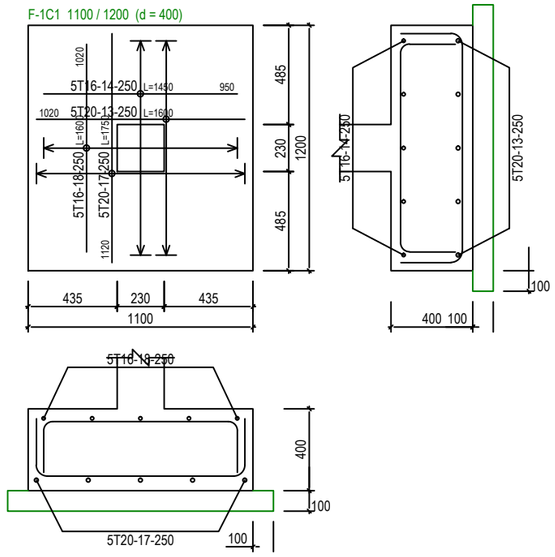

F-1C4 1300 / 1300 (d = 400)

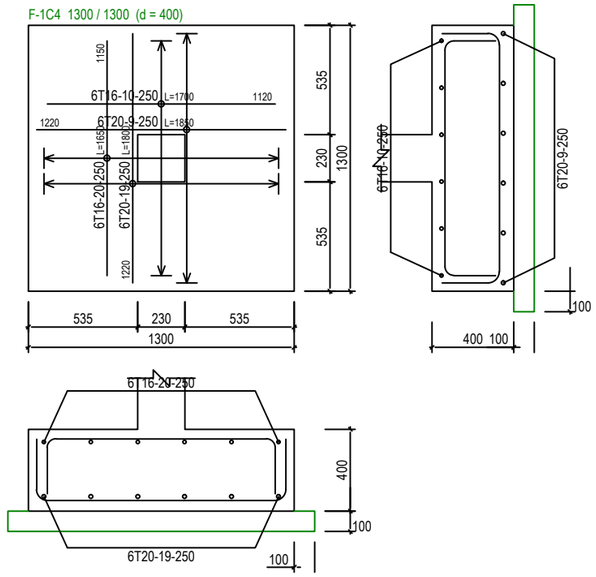

F-1C2 1400 / 1400 (d = 400)

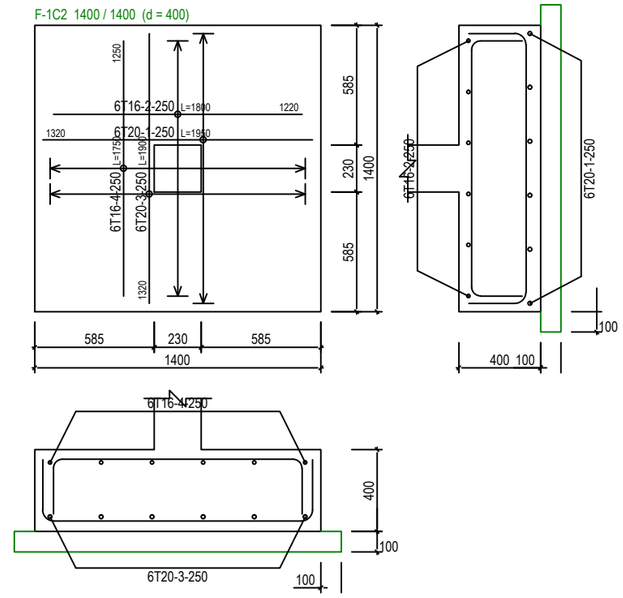

F-1C11 1200 / 1200 (d = 400)

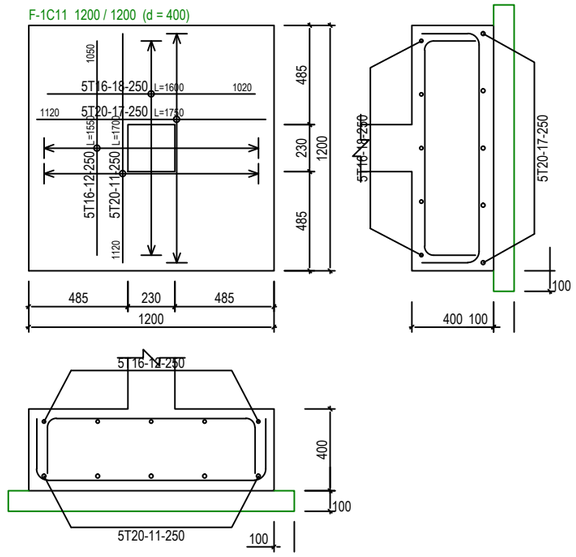

F-1C10 1300 / 1400 (d = 400)

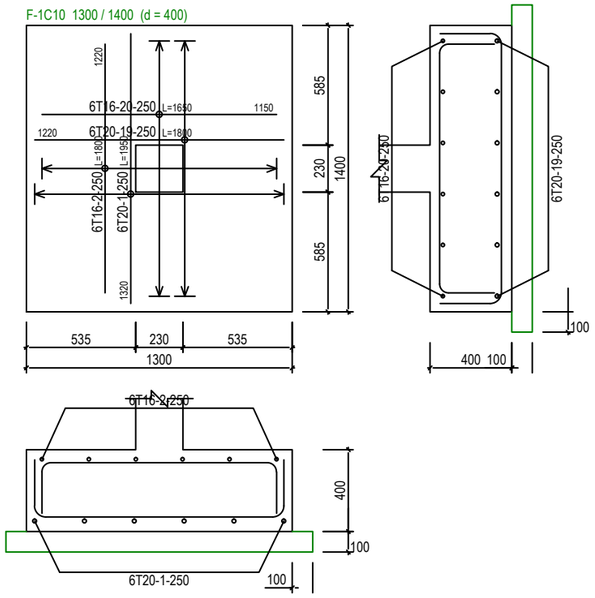

F-1C12 1000 / 1000 (d = 400)

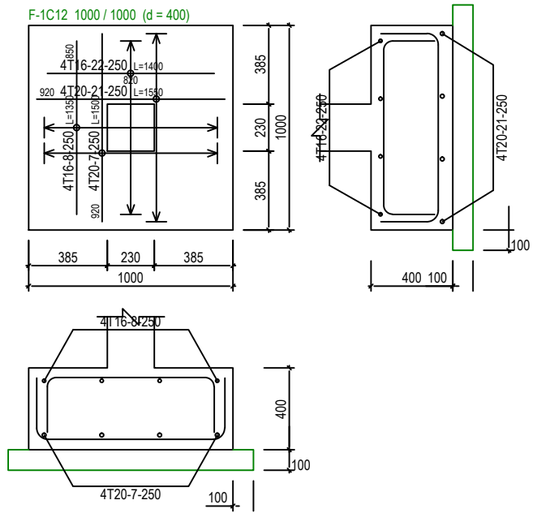

PAD FOOTING DETAILS - 2 [ALLOWABLE STRESS OF SOIL 200 KN/m²]

SCALE 1:30

SERI BUMI CONSULTANT Unit 14, 2nd Flr, Blk. A, Gadong Central, Spg. 21, Gadong BRUNEI

(sbc) SERI BUMI CONSULTANT
CIVIL & STRUCTURAL ENGINEERING CONSULTANT
No: 14, 2nd FLOOR, BLOCK A, GADONG CENTRAL, SIMPANG 21, JALAN GADONG, BSB, BRUNEI DARUSSALAM
TEL: 673-2427275 FAX: 673-2427279
E-MAIL: sbc.brunei@gmail.com

CLIENT:

NO.	AMENDMENTS	BY	DATE

DESIGNED BY	THAN ZAW TUN	
DRAWN BY	SAI	
CHECKED BY	MD. YUNUS	
APPROVED BY		DATE 13/09/2022

SCALE: 1:30

TITLE: PAD FOOTING DETAILS - 2 [ALLOWABLE STRESS OF SOIL 200KN/m²]

PROJECT: PROPOSED NEW 1 UNIT STANDARD DESIGN OF FARM LABOUR QUARTERS, BRUNEI DARUSSALAM (FOR 5 PERSONS) -OPTION 1

JOB NO:

SHEET NO:

DRAWING NO: SBC/Q366/AFLQ/5P/RC/CS - 103B

REV:

St: 2 (+4.00m)	A-1	A-2	A-3	A-4	A-5	A-6
St: 1 (+1.00m)	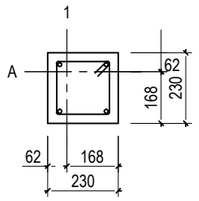 (230x230) 4T12 Link:T8-125	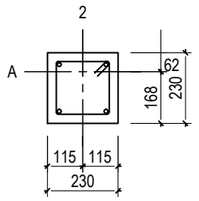 (230x230) 4T12 Link:T8-125	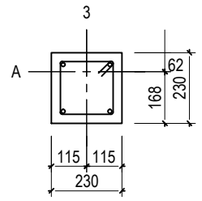 (230x230) 4T12 Link:T8-125	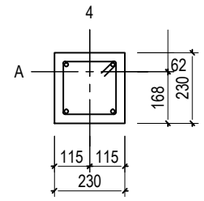 (230x230) 4T12 Link:T8-125	AS BELOW	AS BELOW
	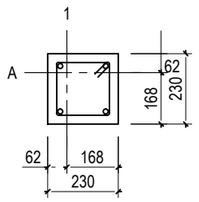 (230x230) 4T16 Link:T8-175	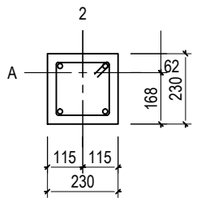 (230x230) 4T16 Link:T8-175	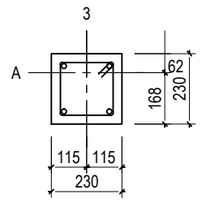 (230x230) 4T16 Link:T8-175	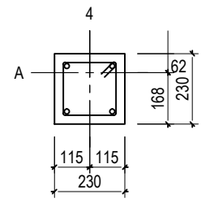 (230x230) 4T16 Link:T8-175	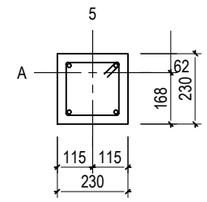 (230x230) 4T12 Link:T8-125	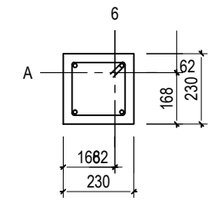 (230x230) 4T12 Link:T8-125
	1C1,2C1	1C2,2C2	1C3,2C3	1C4,2C4	1C5,2C5	1C6,2C6

St: 2 (+4.00m)	C-1	C-2	C-3	C-4	C-5	C-6
St: 1 (+1.00m)	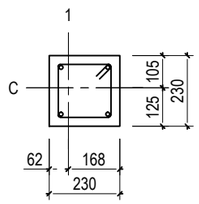 (230x230) 4T12 Link:T8-125	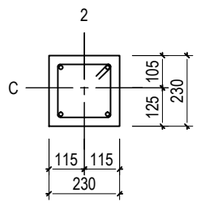 (230x230) 4T12 Link:T8-125	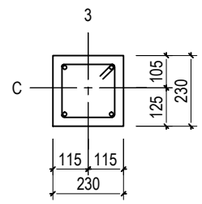 (230x230) 4T12 Link:T8-125	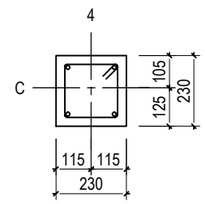 (230x230) 4T12 Link:T8-125	AS BELOW	AS BELOW
	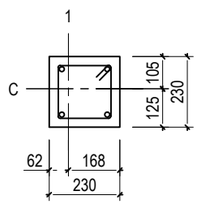 (230x230) 4T16 Link:T8-175	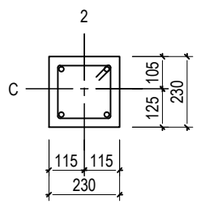 (230x230) 4T16 Link:T8-175	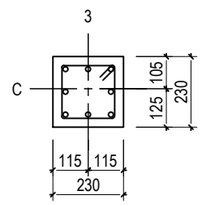 (230x230) 8T16 Link:T8-175	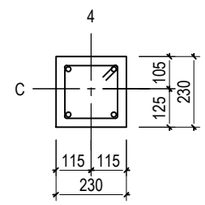 (230x230) 4T16 Link:T8-175	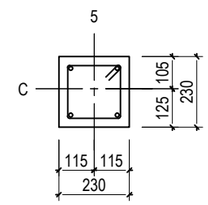 (230x230) 4T12 Link:T8-125	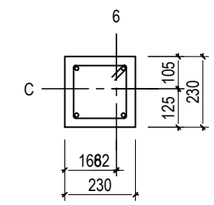 (230x230) 4T12 Link:T8-125
	1C7,2C7	1C8,2C8	1C9,2C9	1C10,2C10	1C11,2C11	1C12,2C12

SERI BUMI CONSULTANT Unit 14, 2nd Flr, Blk. A, Gadong Central, Spg. 21, Gadong BRUNEI

(sbc)
SERI BUMI CONSULTANT
CIVIL & STRUCTURAL ENGINEERING CONSULTANT
No: 14, 2nd FLOOR, BLOCK A, GADONG CENTRAL, SIMPANG 21, JALAN GADONG, BSB, BRUNEI DARUSSALAM
TEL: 673-2427275 FAX: 673-2427279
E-MAIL: sbc.brunei@gmail.com

CLIENT:

NO.	AMENDMENTS	BY	DATE

DESIGNED BY	THAN ZAW TUN	
DRAWN BY	SAI	
CHECKED BY	MD. YUNUS	
APPROVED BY		DATE 13/09/2022

SCALE: N.T.S

TITLE: COLUMN SCHEDULE

PROJECT: PROPOSED NEW 1 UNIT STANDARD DESIGN OF FARM LABOUR QUARTERS, BRUNEI DARUSSALAM (FOR 5 PERSONS) -OPTION 1

JOB NO:

SHEET NO:

DRAWING NO: SBC/Q366/AFLQ/5P/RC/CS - 104

REV:

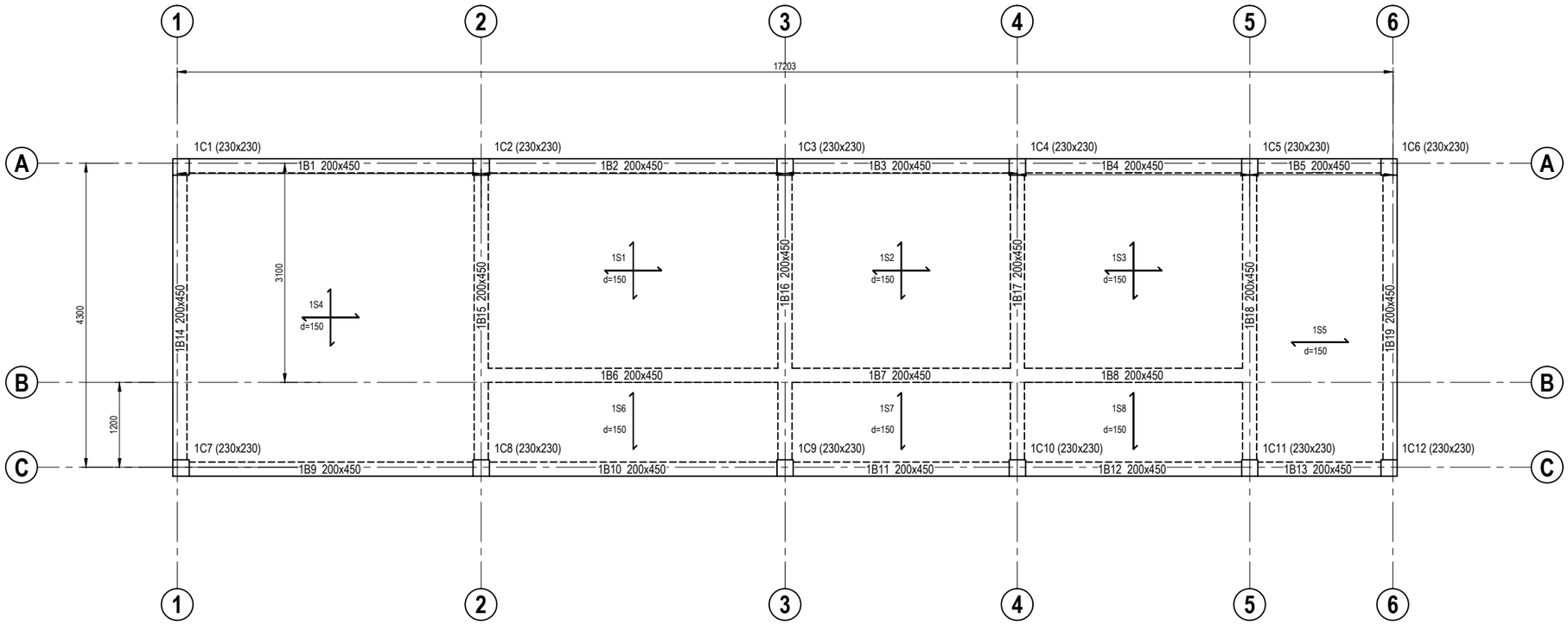

GROUND FLOOR BEAM LAYOUT PLAN

SCALE 1 : 75

SERI BUMI CONSULTANT
Unit 14,
2nd Flr, Blk. A,
Gadong Central,
Spg. 21, Gadong
BRUNEI

(sbc)
SERI BUMI CONSULTANT
CIVIL & STRUCTURAL ENGINEERING CONSULTANT
No: 14, 2nd FLOOR, BLOCK A, GADONG CENTRAL, SIMPANG 21, JALAN GADONG, BSB, BRUNEI DARUSSALAM
TEL: 673-2427275 FAX: 673-2427279
E-MAIL: sbc.brunei@gmail.com

CLIENT:

NO.	AMENDMENTS	BY	DATE

DESIGNED BY	THAN ZAW TUN	
DRAWN BY	SAI	
CHECKED BY	MD. YUNUS	
APPROVED BY		DATE 13/09/2022

SCALE: 1:75

TITLE: GROUND FLOOR BEAM LAYOUT PLAN

PROJECT: PROPOSED NEW 1 UNIT STANDARD DESIGN OF FARM LABOUR QUARTERS, BRUNEI DARUSSALAM (FOR 5 PERSONS) -OPTION 1

JOB NO:

SHEET NO:

DRAWING NO: SBC/Q366/AFLQ/5P/RC/CS - 200

REV:

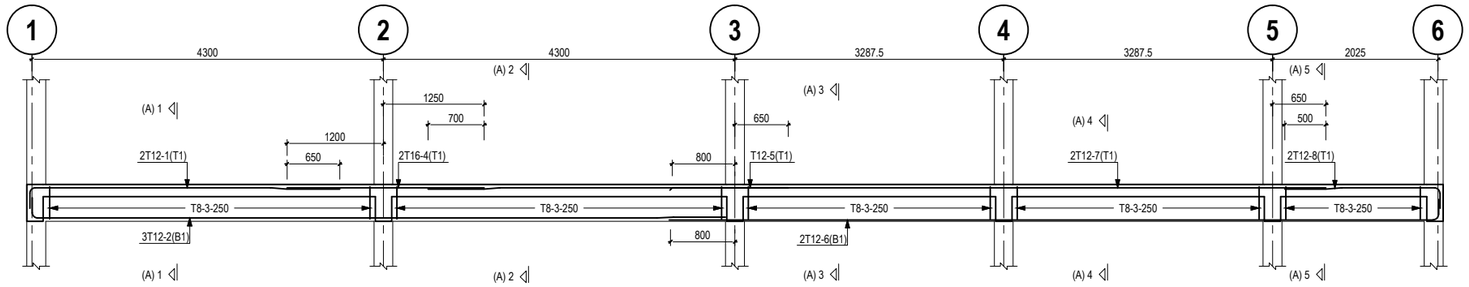

1B1 (200x450) 1B2 (200x450) 1B3 (200x450) 1B4 (200x450) 1B5 (200x450)

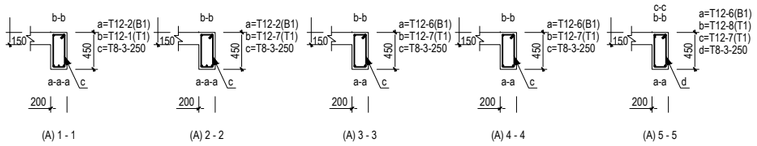

(A) 1 - 1 (A) 2 - 2 (A) 3 - 3 (A) 4 - 4 (A) 5 - 5

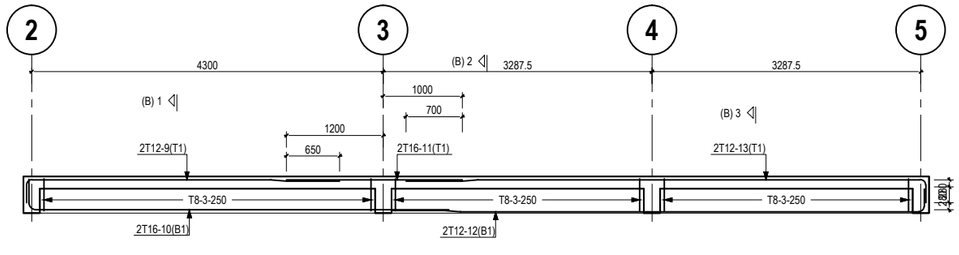

1B6 (200x450) 1B7 (200x450) 1B8 (200x450)

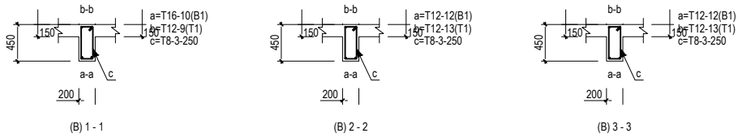

(B) 1 - 1 (B) 2 - 2 (B) 3 - 3

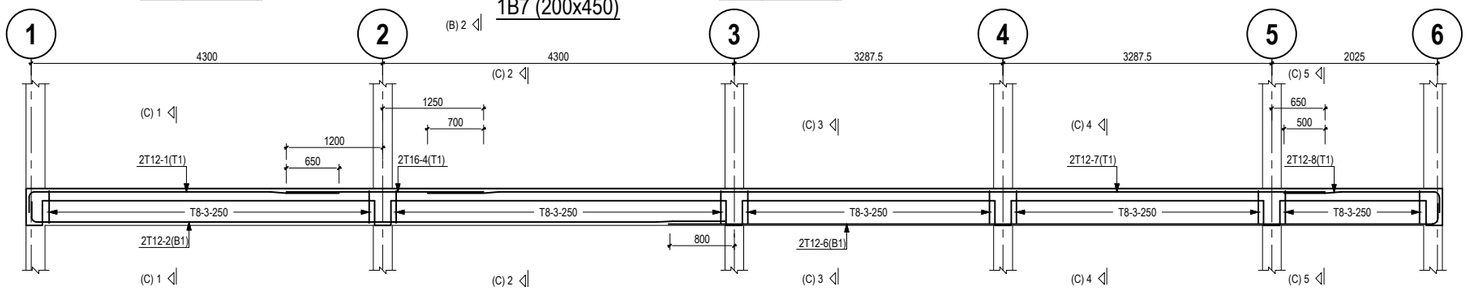

1B9 (200x450) 1B10 (200x450) 1B11 (200x450) 1B12 (200x450) 1B13 (200x450)

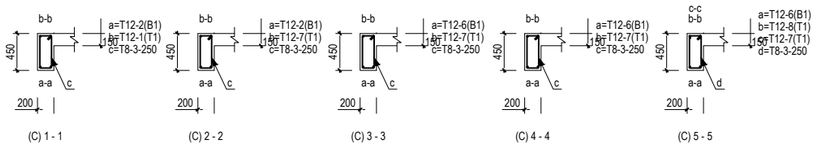

(C) 1 - 1 (C) 2 - 2 (C) 3 - 3 (C) 4 - 4 (C) 5 - 5

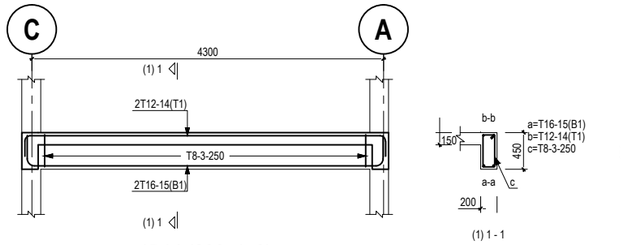

(1) 1 - 1

1B14 (200x450)

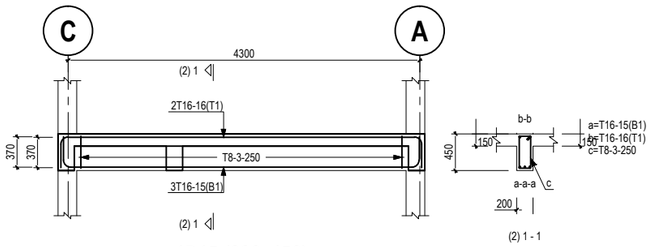

(2) 1 - 1

1B15 (200x450)

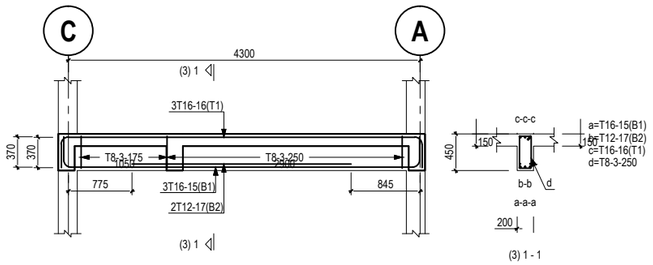

(3) 1 - 1

1B16 (200x450)

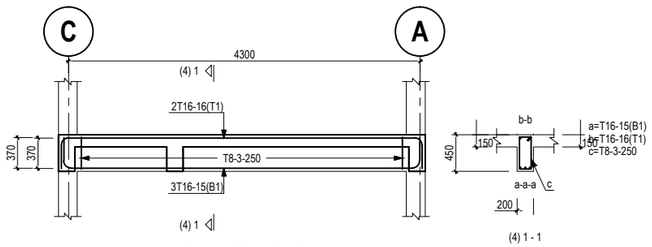

(4) 1 - 1

1B17 (200x450)

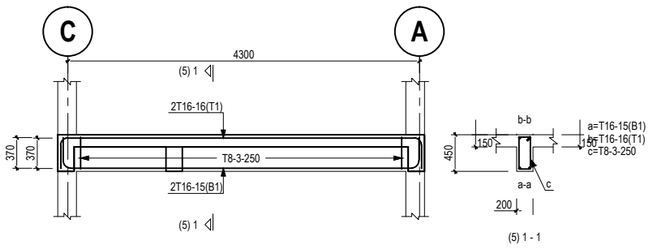

(5) 1 - 1

1B18 (200x450)

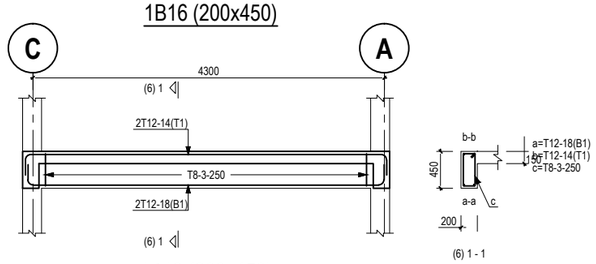

(6) 1 - 1

1B19 (200x450)

SERI BUMI CONSULTANT
Unit 14,
2nd Flr, Blk. A,
Gadong Central,
Spg. 21, Gadong
BRUNEI

(sbc)
SERI BUMI CONSULTANT
CIVIL & STRUCTURAL ENGINEERING CONSULTANT
No: 14, 2nd FLOOR, BLOCK A, GADONG CENTRAL, SIMPANG 21, JALAN GADONG, BSB, BRUNEI DARUSSALAM
TEL: 673-2427275 FAX: 673-2427279
E-MAIL: sbc.brunei@gmail.com

CLIENT:

NO.	AMENDMENTS	BY	DATE

DESIGNED BY	THAN ZAW TUN	
DRAWN BY	SAI	
CHECKED BY	MD. YUNUS	
APPROVED BY		DATE 13/09/2022

SCALE: 1:75

TITLE: GROUND FLOOR BEAM DETAILS

PROJECT: PROPOSED NEW 1 UNIT STANDARD DESIGN OF FARM LABOUR QUARTERS, BRUNEI DARUSSALAM (FOR 5 PERSONS) -OPTION 1

JOB NO:

SHEET NO:

DRAWING NO: SBC/Q366/AFLQ/5P/RC/CS - 201

REV:

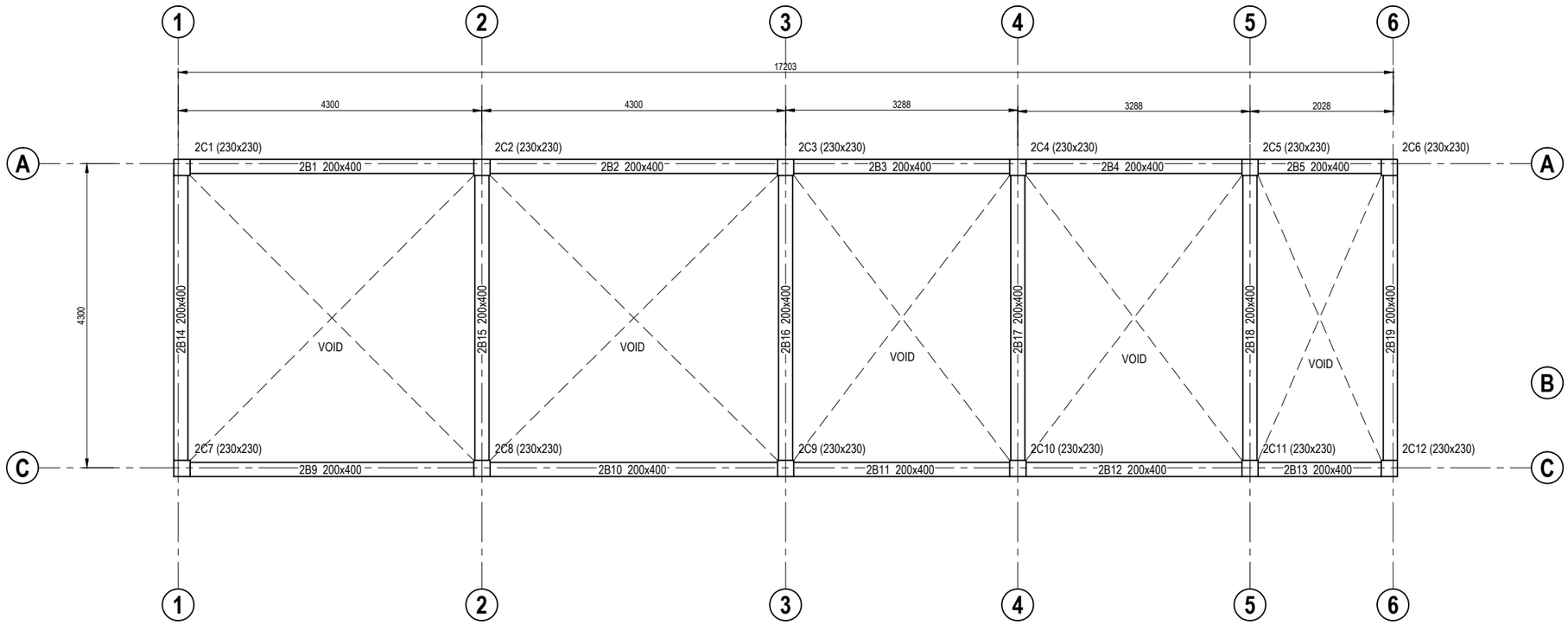

ROOF BEAM LAYOUT PLAN

SCALE 1 : 75

SERI BUMI CONSULTANT
Unit 14,
2nd Flr, Blk. A,
Gadong Central,
Spg. 21, Gadong
BRUNEI

SERI BUMI CONSULTANT
CIVIL & STRUCTURAL ENGINEERING CONSULTANT
No: 14, 2nd FLOOR, BLOCK A, GADONG CENTRAL, SIMPANG 21, JALAN GADONG, BSB, BRUNEI DARUSSALAM
TEL: 673-2427275 FAX: 673-2427279
E-MAIL: sbc.brunei@gmail.com

CLIENT:

NO.	AMENDMENTS	BY	DATE

DESIGNED BY	THAN ZAW TUN	
DRAWN BY	SAI	
CHECKED BY	MD. YUNUS	
APPROVED BY		DATE 13/09/2022

SCALE: 1:75

TITLE: ROOF BEAM LAYOUT PLAN

PROJECT: PROPOSED NEW 1 UNIT STANDARD DESIGN OF FARM LABOUR QUARTERS, BRUNEI DARUSSALAM (FOR 5 PERSONS) -OPTION 1

JOB NO:

SHEET NO:

DRAWING NO: SBC/Q366/AFLQ/5P/RC/CS - 300

REV:

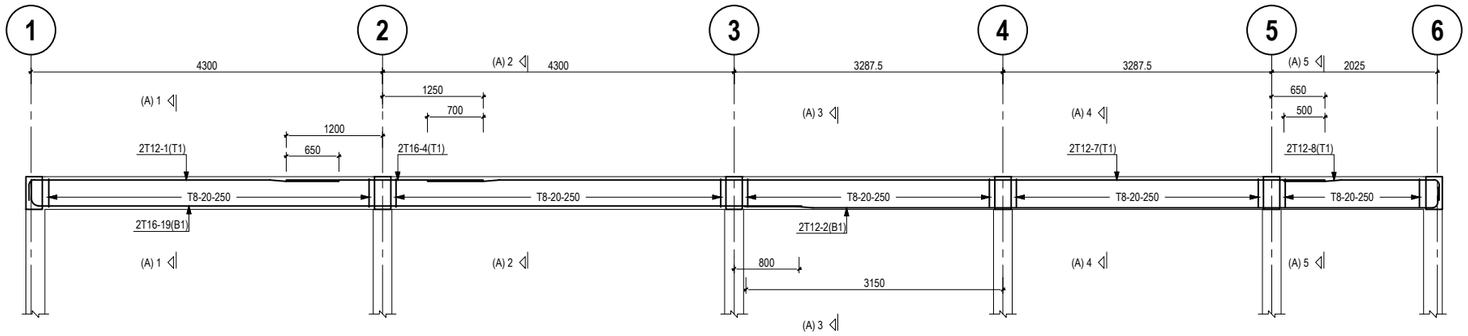

2B1 (200x400) 2B2 (200x400) 2B3 (200x400) 2B4 (200x400) 2B5 (200x400)

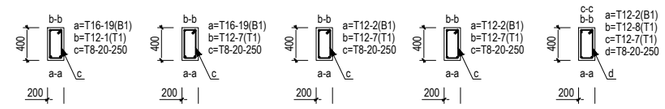

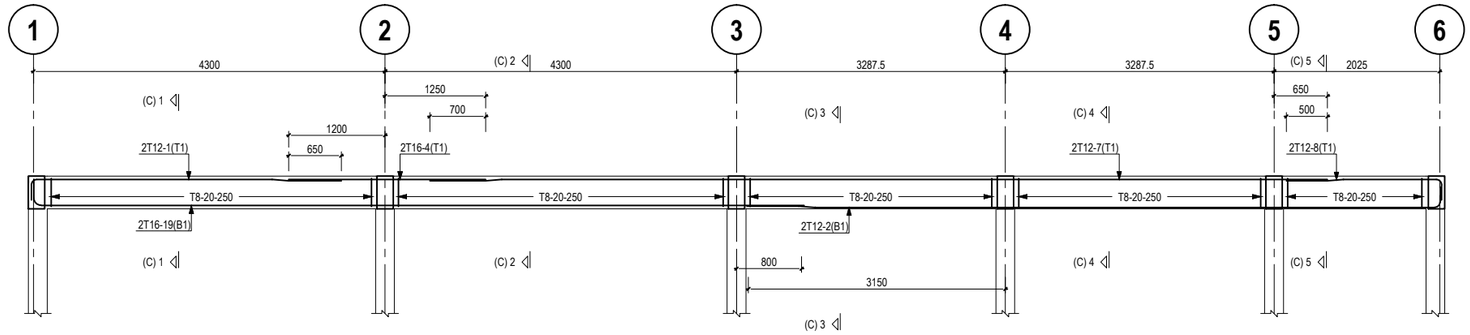

2B9 (200x400) 2B10 (200x400) 2B11 (200x400) 2B12 (200x400) 2B13 (200x400)

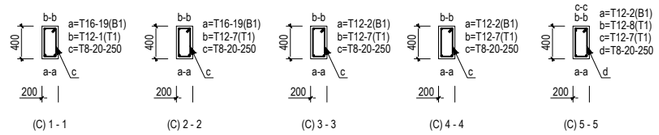

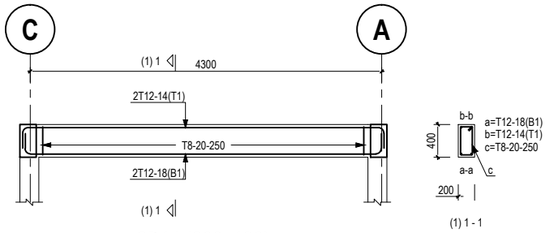

2B14 (200x400)

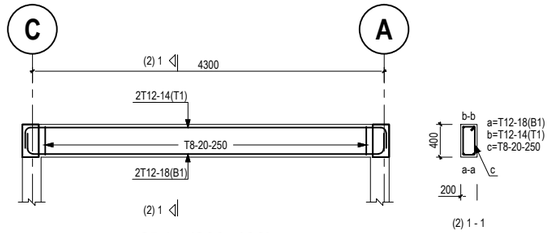

2B15 (200x400)

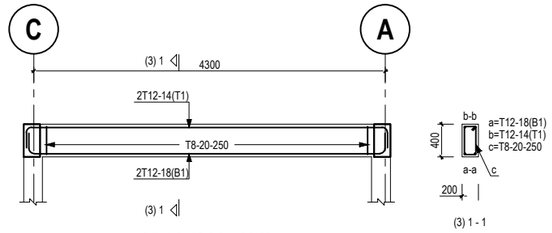

2B16 (200x400)

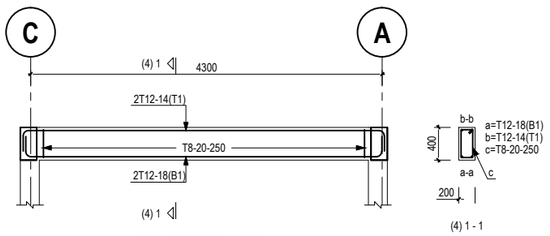

2B17 (200x400)

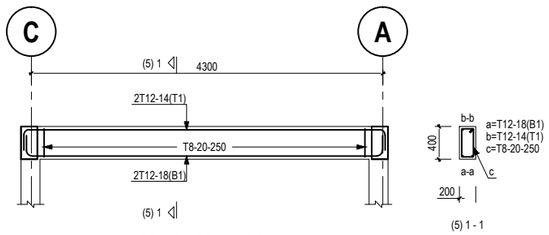

2B18 (200x400)

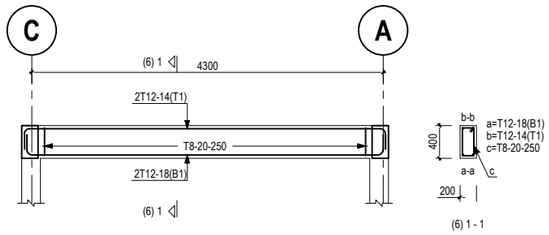

2B19 (200x400)

SERI BUMI CONSULTANT
Unit 14,
2nd Flr, Blk. A,
Gadong Central,
Spg. 21, Gadong
BRUNEI

(sbc)
SERI BUMI CONSULTANT
CIVIL & STRUCTURAL ENGINEERING CONSULTANT
No: 14, 2nd FLOOR, BLOCK A, GADONG CENTRAL, SIMPANG 21, JALAN GADONG, BSB, BRUNEI DARUSSALAM
TEL: 673-2427275 FAX: 673-2427279
E-MAIL: sbc.brunei@gmail.com

CLIENT:

NO.	AMENDMENTS	BY	DATE

DESIGNED BY	THAN ZAW TUN	
DRAWN BY	SAI	
CHECKED BY	MD. YUNUS	
APPROVED BY		DATE 13/09/2022

SCALE: 1:75

TITLE: ROOF BEAM DETAILS

PROJECT: PROPOSED NEW 1 UNIT STANDARD DESIGN OF FARM LABOUR QUARTERS, BRUNEI DARUSSALAM (FOR 5 PERSONS) -OPTION 1

JOB NO:

SHEET NO:

DRAWING NO: SBC/Q366/AFLQ/5P/RC/CS - 301

REV:

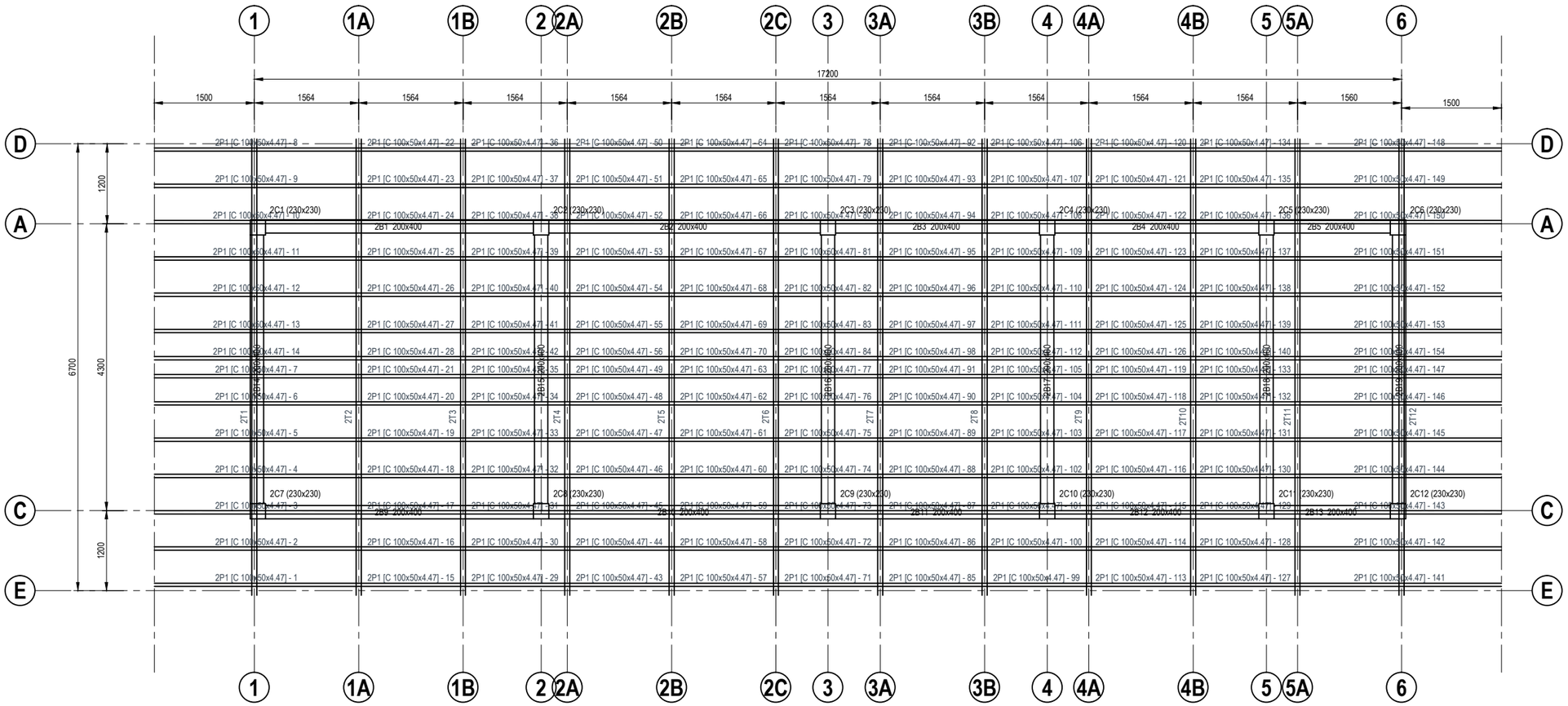

ROOF TRUSSES LAYOUT PLAN

SCALE 1 : 75

SERI BUMI CONSULTANT
Unit 14,
2nd Flr, Blk. A,
Gadong Central,
Spg. 21, Gadong
BRUNEI

(sbc)
SERI BUMI CONSULTANT
CIVIL & STRUCTURAL ENGINEERING CONSULTANT
No: 14, 2nd FLOOR, BLOCK A, GADONG CENTRAL, SIMPANG 21, JALAN GADONG, BSB, BRUNEI DARUSSALAM
TEL: 673-2427275 FAX: 673-2427279
E-MAIL: sbc.brunei@gmail.com

CLIENT:

NO.	AMENDMENTS	BY	DATE

DESIGNED BY	THAN ZAW TUN	
DRAWN BY	SAI	
CHECKED BY	MD. YUNUS	
APPROVED BY		DATE 17/09/2022

SCALE: 1:75

TITLE: ROOF TRUSSES LAYOUT PLAN

PROJECT: PROPOSED NEW 1 UNIT STANDARD DESIGN OF FARM LABOUR QUARTERS, BRUNEI DARUSSALAM (FOR 5 PERSONS) -OPTION 1

JOB NO:

SHEET NO:

DRAWING NO: SBC/Q366/AFLQ/5P/RC/CS - 400

REV:

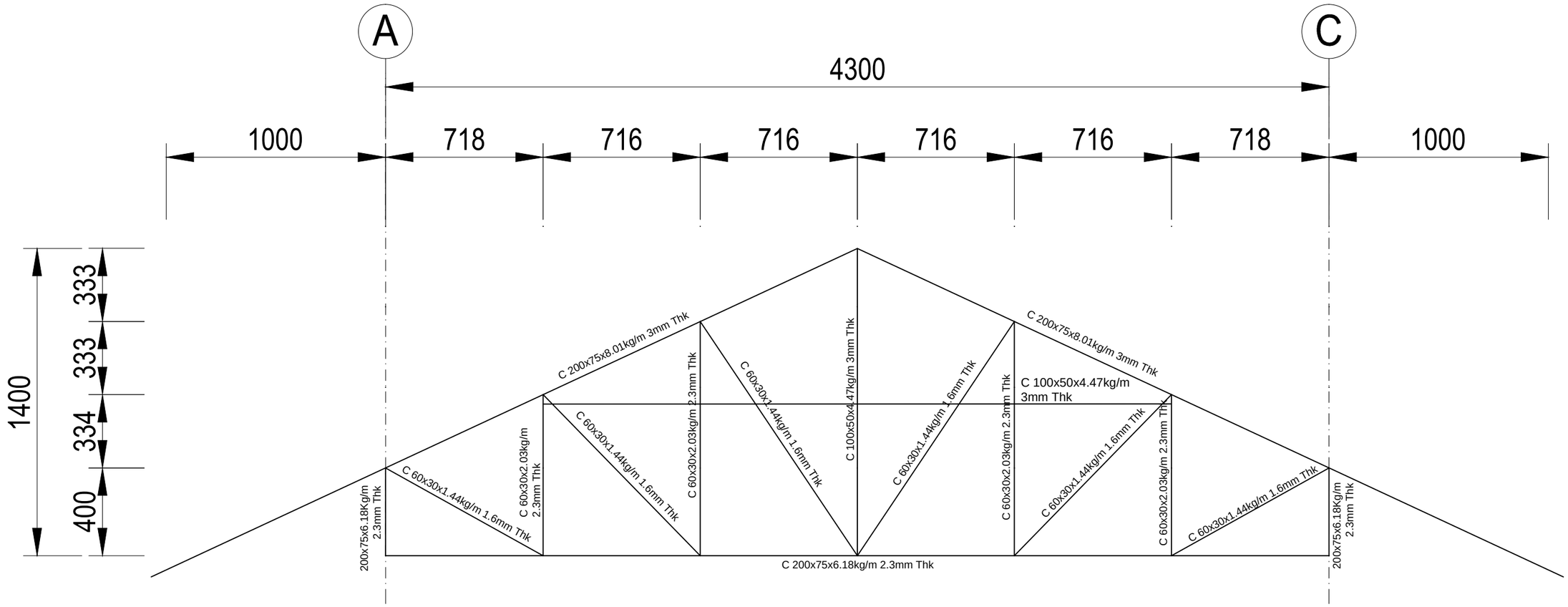

ROOF TRUSS SECTION(FOR ROOF TRUSS TO REINFORCE CONCRETE BEAM CONNECTION)

SERI BUMI CONSULTANT
Unit 14, 2nd Flr, Blk. A, Gadong Central, Spg. 21, Gadong
BRUNEI

(sbc)
SERI BUMI CONSULTANT
CIVIL & STRUCTURAL ENGINEERING CONSULTANT
No: 14, 2nd FLOOR, BLOCK A, GADONG CENTRAL, SIMPANG 21, JALAN GADONG, BSB, BRUNEI DARUSSALAM
TEL: 673-2427275 FAX: 673-2427279
E-MAIL: sbc.brunei@gmail.com

CLIENT:

NO.	AMENDMENTS	BY	DATE

DESIGNED BY	THAN ZAW TUN	
DRAWN BY	SAI	
CHECKED BY	MD. YUNUS	
APPROVED BY		DATE 20/09/2022

SCALE: 1:20

TITLE: ROOF TRUSSES SECTION

PROJECT: PROPOSED NEW 1 UNIT STANDARD DESIGN OF FARM LABOUR QUARTERS, BRUNEI DARUSSALAM (FOR 5 PERSONS)

JOB NO:

SHEET NO:

DRAWING NO: SBC/Q366/AFLQ/5P/RC/CS - 401

REV:

NOTE:
- ONLY SUITABLE AND APPROVED SCREWS BY APPOINTED SUPERVISION CONSULTANT TO BE USED FOR ROOF TRUSSES MEMBERS CONNECTION.
- EXAMPLE OF SCREW LABELLING FOR VARIOUS JOINTS
  5X12-14X20 MEANS 5 NOS OF 12 TO 14MM DIAMETER OF 20MM LENGTH SCREW TYPE.

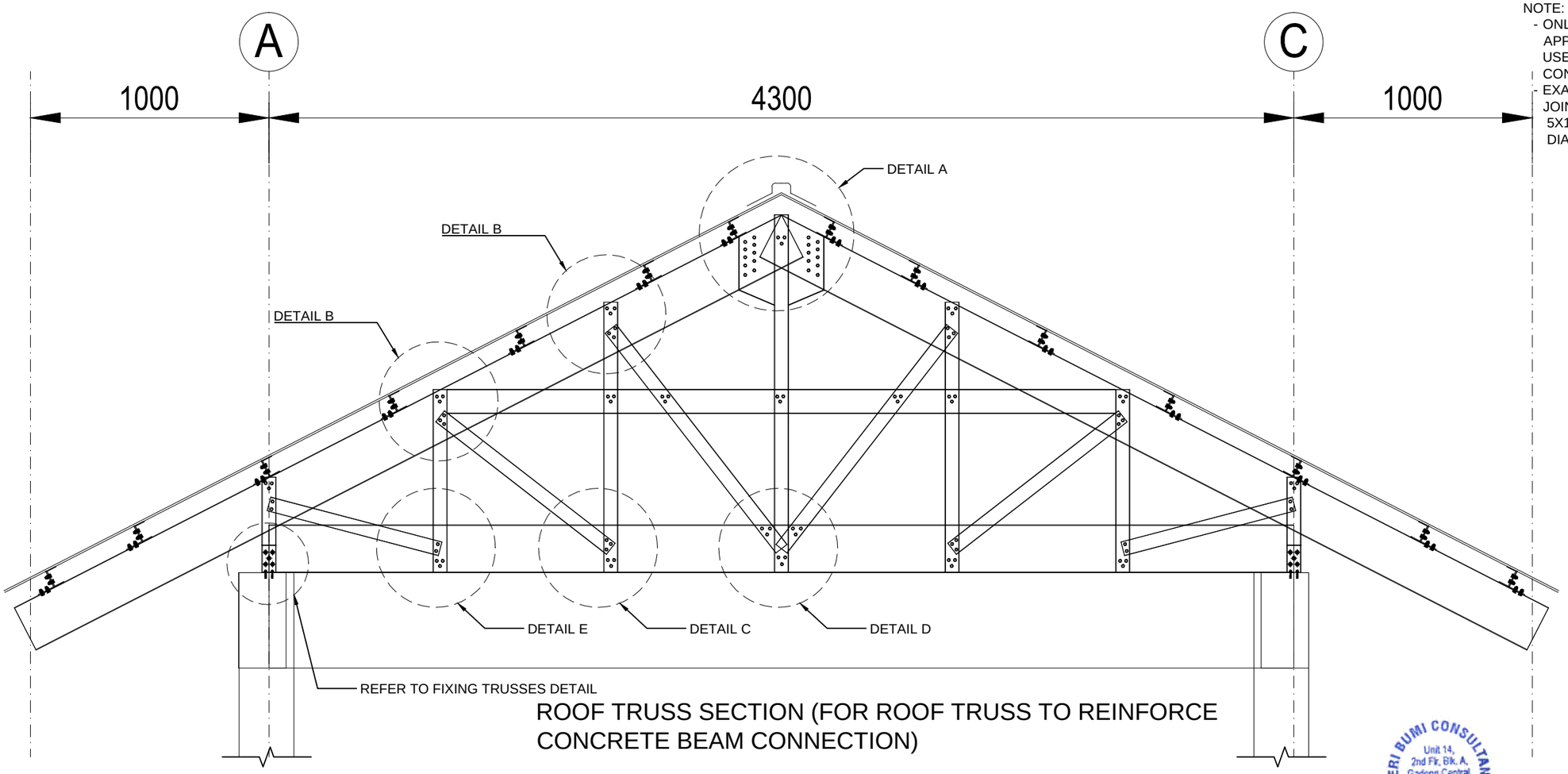

ROOF TRUSS SECTION (FOR ROOF TRUSS TO REINFORCE CONCRETE BEAM CONNECTION)

JTS

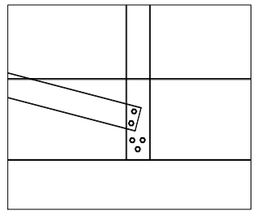

DETAIL E
5 x 12-14 x 20
SCREW

SERI BUMI CONSULTANT
Unit 14, 2nd Flr, Blk. A, Gadong Central, Spg. 21, Gadong
BRUNEI

C-PURLIN

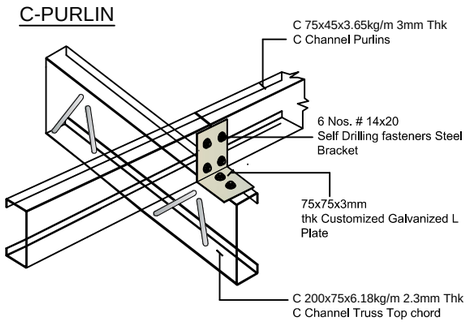

TYPICAL BRACKET 3mm (FOR HEEL FIXINGS)

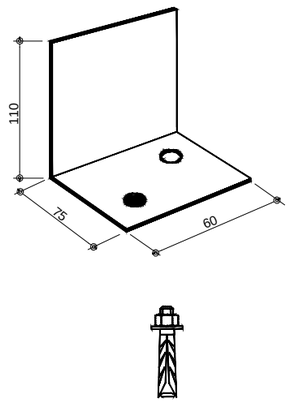

ANCHOR BOLT 80/100mm

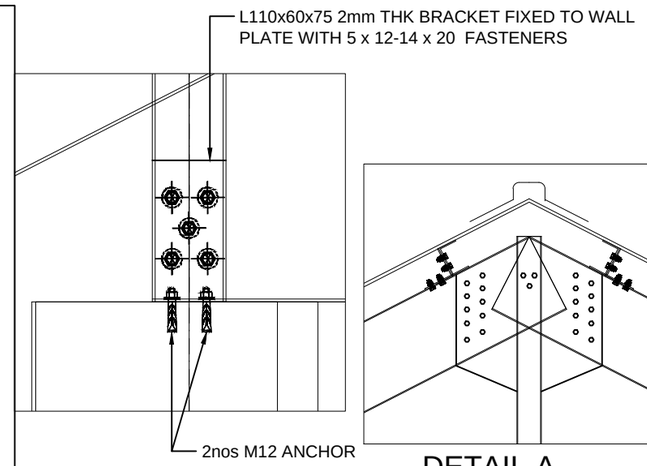

FIXING TRUSSES
(HEEL JOINT)

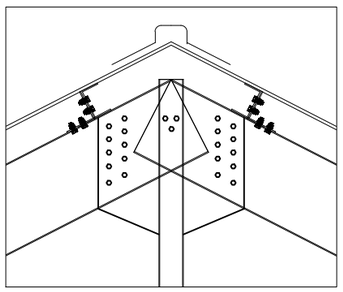

DETAIL A
23 x 12-14 x 20
SCREW

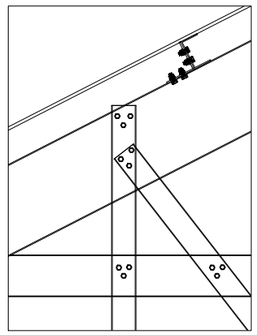

DETAIL B
6 x 12-14 x 20
SCREW

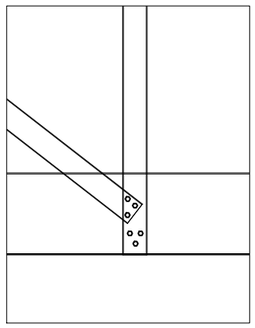

DETAIL C
6 x 12-14 x 20
SCREW

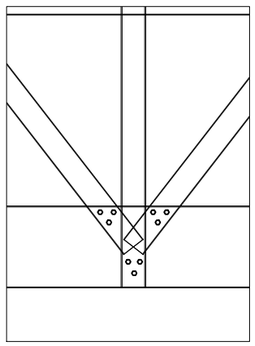

DETAIL D
9 x 12-14 x 20
SCREW

(sbc)
SERI BUMI CONSULTANT
CIVIL & STRUCTURAL ENGINEERING CONSULTANT
No: 14, 2nd FLOOR, BLOCK A, GADONG CENTRAL, SIMPANG 21, JALAN GADONG, BSB, BRUNEI DARUSSALAM
TEL: 673-2427275 FAX: 673-2427279
E-MAIL: sbc.brunei@gmail.com

CLIENT:

NO.	AMENDMENTS	BY	DATE

DESIGNED BY	THAN ZAW TUN		
DRAWN BY	SAI		
CHECKED BY	MD. YUNUS		
APPROVED BY		DATE	20/09/2022

SCALE: 1:20

TITLE: ROOF TRUSSES AND PURLIN CONNECTIONS DETAILS

PROJECT: PROPOSED NEW 1 UNIT STANDARD DESIGN OF FARM LABOUR QUARTERS, BRUNEI DARUSSALAM (FOR 5 PERSONS)

JOB NO:

SHEET NO:

DRAWING NO: SBC/Q366/AFLQ/5P/RC/CS - 402

REV:

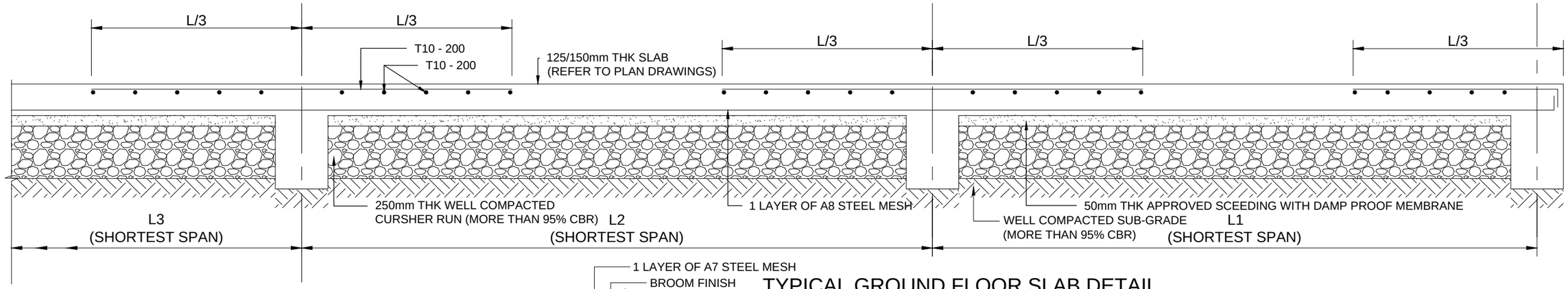

TYPICAL GROUND FLOOR SLAB DETAIL

SCALE 1 : 20

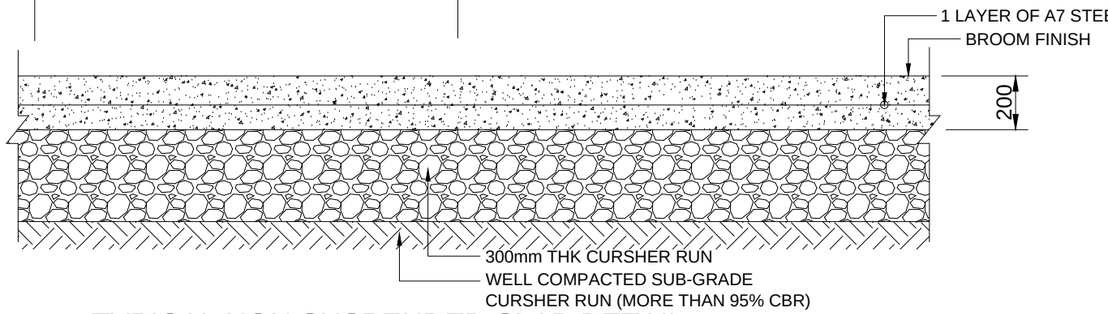

TYPICAL NON SUSPENDED SLAB DETAIL

SCALE 1 : 20

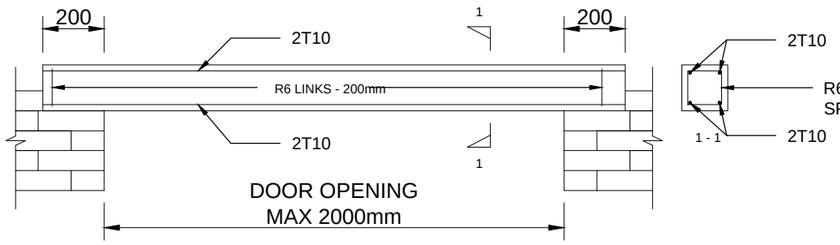

TYPICAL LINTEL BEAM DETAIL

SCALE 1 : 20

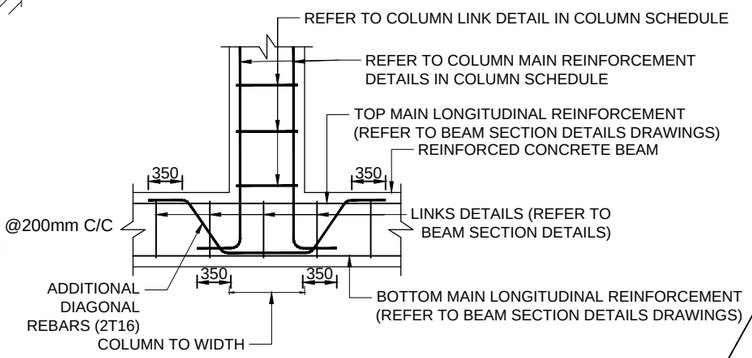

TYPICAL FLOATING COLUMN DETAIL

SCALE 1 : 20

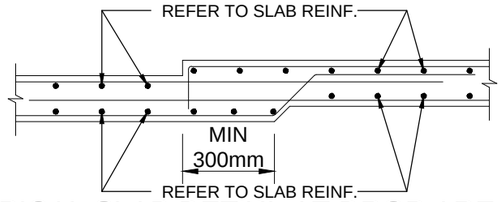

TYPICAL SLAB DETAIL AT DROP AREA

SCALE 1 : 20

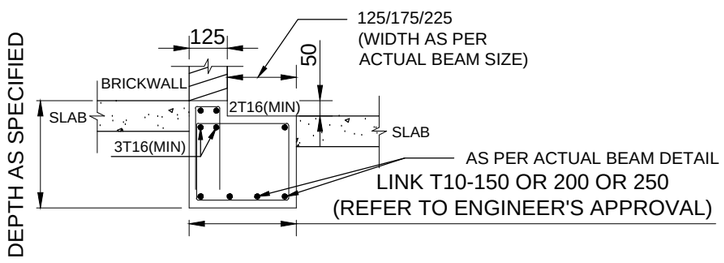

APPROXIMATE & TYPICAL BEAM DETAIL FOR 50mm OR 100mm DROP WHICH NEEDS TO BE ALIGNED/COORDINATED WITH ARCHITECT'S DRAWINGS.

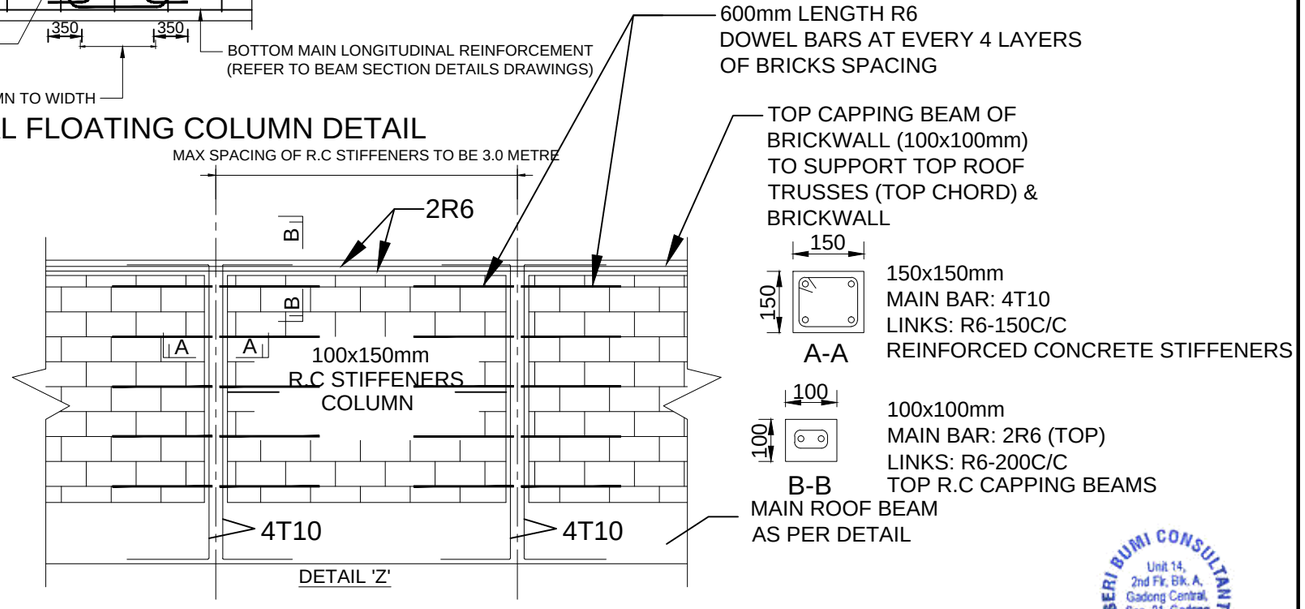

TYPICAL REINFORCED CONCRETE STIFFENER COLUMNS & CAPPING BEAMS DETAILS

SERI BUMI CONSULTANT
Unit 14, 2nd Flr, Blk. A, Gadong Central, Spg. 21, Gadong
BRUNEI

(sbc)
SERI BUMI CONSULTANT
CIVIL & STRUCTURAL ENGINEERING CONSULTANT
No: 14, 2nd FLOOR, BLOCK A, GADONG CENTRAL, SIMPANG 21, JALAN GADONG, BSB, BRUNEI DARUSSALAM
TEL: 673-2427275 FAX: 673-2427279
E-MAIL: sbc.brunei@gmail.com

CLIENT:					
NO.	AMENDMENTS	BY	DATE		

DESIGNED BY	THAN ZAW TUN	
DRAWN BY	SAI	
CHECKED BY	MD. YUNUS	
APPROVED BY		DATE 13/09/2022

SCALE: 1:20

TITLE: MISCELLANEOUS DETAILS 1

PROJECT: PROPOSED NEW 1 UNIT STANDARD DESIGN OF FARM LABOUR QUARTERS, BRUNEI DARUSSALAM (FOR 5 PERSONS) -OPTION 1

JOB NO:

SHEET NO:

DRAWING NO: SBC/Q366/AFLQ/5P/RC/MISC-100

REV:

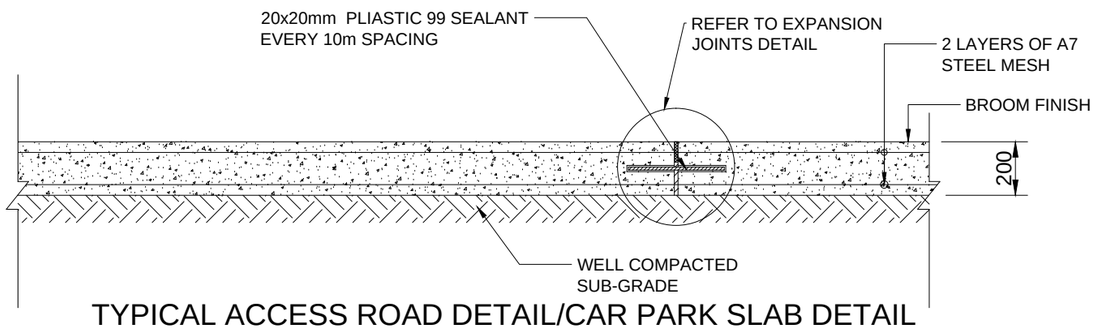

TYPICAL ACCESS ROAD DETAIL/CAR PARK SLAB DETAIL

SCALE 1 : 20

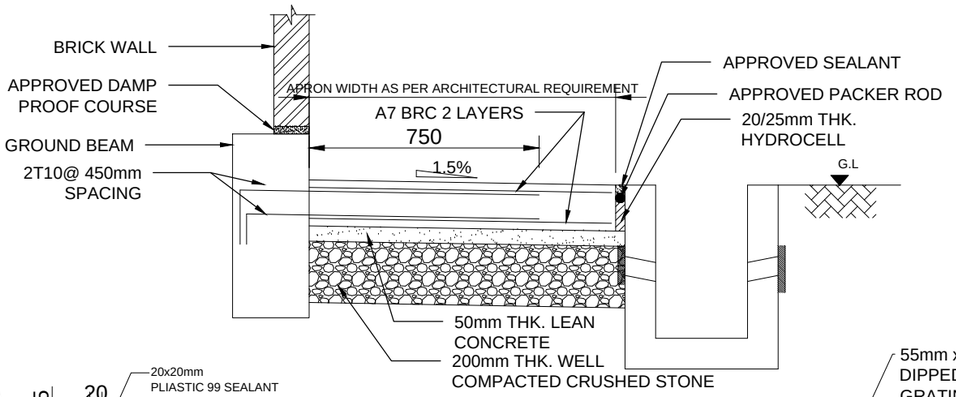

TYPICAL APRON SLAB DETAIL

SCALE 1 : 20

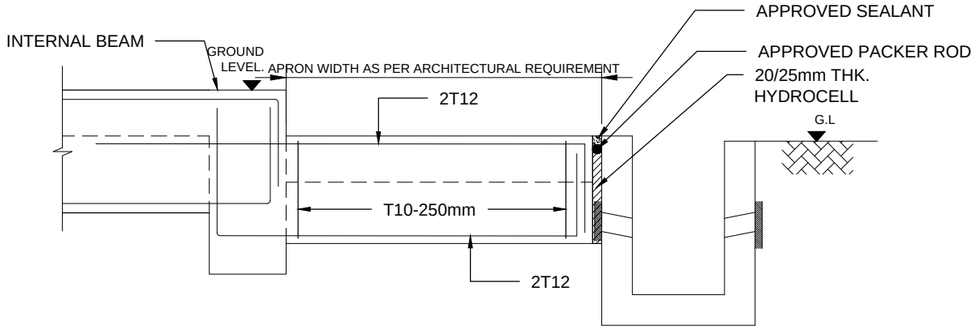

TYPICAL APRON BEAM DETAIL(200x450)

SCALE 1 : 20

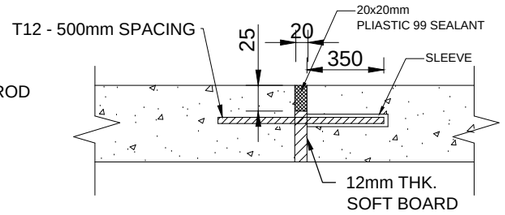

EXPANSION JOINTS DETAIL

SCALE 1 : 20

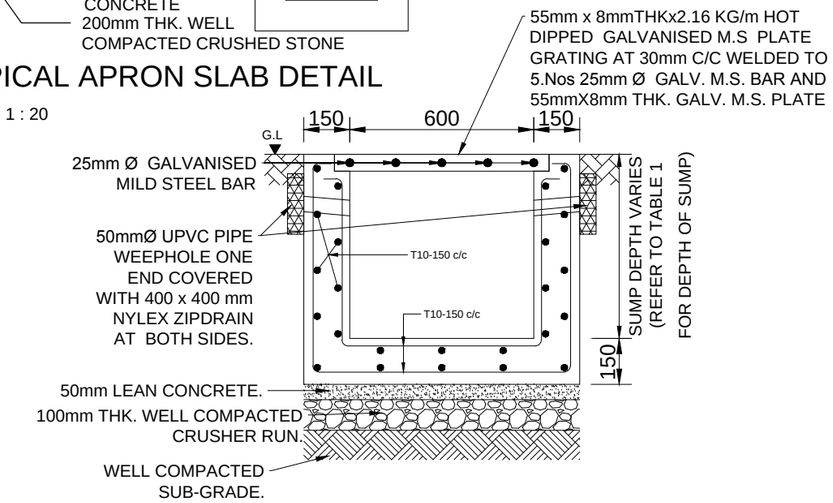

TYPICAL SECTION 'Z-Z'
600x600mm R.C SUMP DETAIL

SCALE 1 : 20

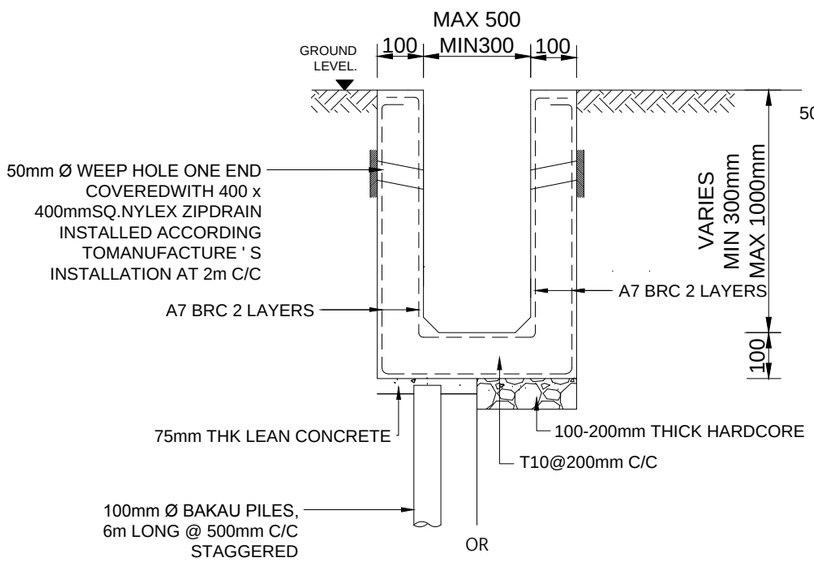

R.C DRAIN DETAIL

SCALE 1 : 20

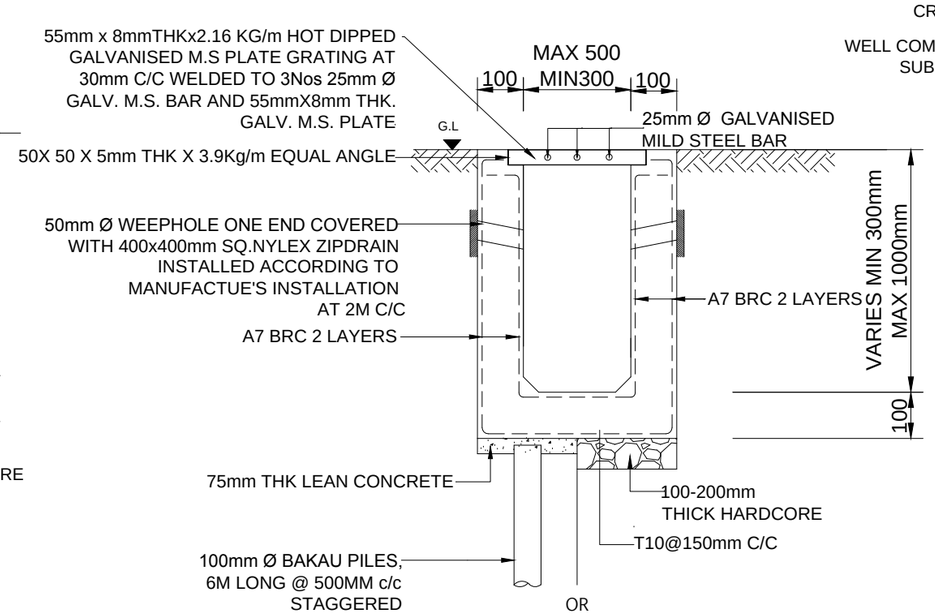

R.C DRAIN WITH GRATING DETAIL

SCALE 1 : 20

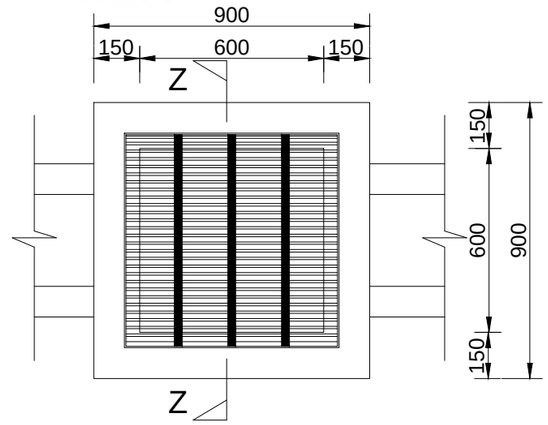

R.C SUMP PLAN LAYOUT

SCALE 1 : 20

SERI BUMI CONSULTANT
Unit 14,
2nd Flr, Blk. A,
Gadong Central,
Spg. 21, Gadong
BRUNEI

(sbc)
SERI BUMI CONSULTANT
CIVIL & STRUCTURAL ENGINEERING CONSULTANT
No: 14, 2nd FLOOR, BLOCK A, GADONG CENTRAL, SIMPANG 21, JALAN GADONG, BSB, BRUNEI DARUSSALAM
TEL: 673-2427275 FAX: 673-2427279
E-MAIL: sbc.brunei@gmail.com

CLIENT:

NO.	AMENDMENTS	BY	DATE

DESIGNED BY	THAN ZAW TUN	
DRAWN BY	SAI	
CHECKED BY	MD. YUNUS	
APPROVED BY		DATE 13/09/2022

SCALE: 1:20

TITLE: MISCELLANEOUS DETAILS 2

PROJECT: PROPOSED NEW 1 UNIT STANDARD DESIGN OF FARM LABOUR QUARTERS, BRUNEI DARUSSALAM (FOR 5 PERSONS) -OPTION 1

JOB NO:

SHEET NO:

DRAWING NO: SBC/Q366/AFLQ/5P/RC/MISC-101

REV:

PROPOSED NEW 1 UNIT STANDARD DESIGN OF FARM LABOUR QUARTERS, BRUNEI DARUSSALAM (FOR 5 PERSONS) -OPTION 1

LIST OF DRAWINGS

	DESCRIPTIONS	DRAWING NO.	REVISION NO.	REMARKS
1	LIST OF DRAWINGS	SBC/Q366/AFLQ/5P/ST/L - 100	2	
2	GENERAL NOTES	SBC/Q366/AFLQ/5P/ST/G-100		
3	150x150mm R.C PRECAST PILE FOUNDATION LAYOUT PLAN	SBC/Q366/AFLQ/5P/ST/CS-100		
4	PAD FOOTING FOUNDATION LAYOUT PLAN [ALLOWABLE STRESS OF SOIL 100 kN/m²]	SBC/Q366/AFLQ/5P/ST/CS-101		
5	PAD FOOTING DETAILS - 1 [ALLOWABLE STRESS OF SOIL 100 kN/m²]	SBC/Q366/AFLQ/5P/ST/CS-101A		
6	PAD FOOTING DETAILS - 2 [ALLOWABLE STRESS OF SOIL 100 kN/m²]	SBC/Q366/AFLQ/5P/ST/CS-101B		
7	PAD FOOTING FOUNDATION LAYOUT PLAN [ALLOWABLE STRESS OF SOIL 150 kN/m²]	SBC/Q366/AFLQ/5P/ST/CS-102		
8	PAD FOOTING DETAILS - 1 [ALLOWABLE STRESS OF SOIL 150 kN/m²]	SBC/Q366/AFLQ/5P/ST/CS-102A		
9	PAD FOOTING DETAILS - 2 [ALLOWABLE STRESS OF SOIL 150 kN/m²]	SBC/Q366/AFLQ/5P/ST/CS-102B		
10	PAD FOOTING FOUNDATION LAYOUT PLAN [ALLOWABLE STRESS OF SOIL 200 kN/m²]	SBC/Q366/AFLQ/5P/ST/CS-103		
11	PAD FOOTING DETAILS - 1 [ALLOWABLE STRESS OF SOIL 200 kN/m²]	SBC/Q366/AFLQ/5P/ST/CS-103A		
12	PAD FOOTING DETAILS - 2 [ALLOWABLE STRESS OF SOIL 200 kN/m²]	SBC/Q366/AFLQ/5P/ST/CS-103B		
13	COLUMN SCHEDULE	SBC/Q366/AFLQ/5P/ST/CS-104		
14	GROUND FLOOR BEAM LAYOUT PLAN	SBC/Q366/AFLQ/5P/ST/CS-200		
15	GROUND FLOOR BEAM DETAILS	SBC/Q366/AFLQ/5P/ST/CS-201		
16	ROOF BEAM LAYOUT PLAN	SBC/Q366/AFLQ/5P/ST/CS-300		
17	ROOF TRUSSES LAYOUT PLAN	SBC/Q366/AFLQ/5P/ST/CS-400		
18	ROOF TRUSS SECTION(FOR ROOF TRUSS TO REINFORCE CONCRETE BEAM CONNECTION)	SBC/Q366/AFLQ/5P/ST/CS-401		
19	ROOF TRUSS SECTION (FOR ROOF TRUSS TO REINFORCE CONCRETE BEAM CONNECTION)	SBC/Q366/AFLQ/5P/ST/CS-402		
20	MISCELLANEOUS DETAILS - 1	SBC/Q366/AFLQ/5P/ST/MISC-100		
21	MISCELLANEOUS DETAILS - 2	SBC/Q366/AFLQ/5P/ST/MISC-101		

SERI BUMI CONSULTANT Unit 14, 2nd Flr, Blk. A, Gadong Central, Spg. 21, Gadong BRUNEI

(sbc) SERI BUMI CONSULTANT
CIVIL & STRUCTURAL ENGINEERING CONSULTANT
No: 14, 2nd FLOOR, BLOCK A, GADONG CENTRAL, SIMPANG 21, JALAN GADONG, BSB, BRUNEI DARUSSALAM
TEL: 673-2427275 FAX: 673-2427279
E-MAIL: sbc.brunei@gmail.com

CLIENT:

NO.	AMENDMENTS	BY	DATE

DESIGNED BY	THAN ZAW TUN	
DRAWN BY	SAI	
CHECKED BY	MD. YUNUS	
APPROVED BY		DATE 20/09/2022

SCALE: N.T.S

TITLE: LIST OF DRAWINGS

PROJECT: PROPOSED NEW 1 UNIT STANDARD DESIGN OF FARM LABOUR QUARTERS, BRUNEI DARUSSALAM (FOR 5 PERSONS) -OPTION 1

JOB NO:

SHEET NO:

DRAWING NO: SBC/Q366/AFLQ/5P/ST/L - 100

REV: 2

1. GENERAL

1.1 SETTING OUT:
ALL DIMENSIONS MEASURED ON SITE SHALL BE CHECKED AND CONFIRMED WITH RELEVANT ARCHITECTURAL, M&E, CIVIL AND STRUCTURAL DRAWINGS.

1.2 ANY DISCREPANCIES BETWEEN ARCHITECTURAL, C&S AND M&E DRAWINGS SHALL BE REFERRED TO PROJECT ARCHITECT OR STRUCTURAL ENGINEER OR M&E.

1.3 PLEASE NOTE THAT THE ARCHITECTURAL DRAWINGS GRID LINE AND STRUCTURAL DRAWINGS GRID LINES HAVE BEEN PURPOSELY OFF-SET TO EASE CONSTRUCTION ON STRUCTURAL MEMBERS.

2. STANDARDS & CODE OF PRACTICE

2.1 BS 8110 : 1985 STRUCTURAL USE OF CONCRETE
2.2 PBD 12 : 2008 BUILDING GUIDELINES AND REQUIREMENTS
2.3 BS 4449 : 1978 HOT ROLLED STEEL BARS FOR THE REINFORCEMENT OF CONCRETE

3. CONCRETE

3.1 CONCRETE STRENGTH :- 25 N/mm² (GRADE 25) UNLESS OTHERWISE STATED

LEAN CONCRETE	- 15 N/mm²
PILE CAP	- 25 N/mm²
COLUMN	- 25 N/mm²
SLAB	- 25 N/mm²
BEAM	- 25 N/mm²

3.2 CONCRETE COVER TO ALL REINFORCEMENT INCLUDING LINKS SHALL MEET THE 2-HOUR FIRE RATING & AS STATED BELOW (UNLESS OTHERWISE STATED)
COLUMNS : 30mm
BEAMS : 30mm
PILE CAPS : 75mm
SLABS : 20mm

3.3 CONCRETE CURING : TO BE CARRIED OUT BY SPRAYING WITH WATER AND COVERING WITH EITHER GUNI SACKS OR PLASTIC SHEETS.

3.4 ANY COLD JOINTS AND HACKED CONCRETE SURFACE SHALL BE APPLIED WITH APPROVED BONDING AGENT BEFORE POURING NEW CONCRETE.

3.5 50mm (MINIMUM) THICK BLINDING LEAN CONCRETE SHALL BE PROVIDED BENEATH FOOTINGS, GROUND BEAMS AND ALL GROUND FLOOR SLABS SOFFIT.

4. STEEL REINFORCEMENT

4.1 THE MINIMUM YIELD STRENGTH OF STEEL REINFORCEMENT (WITH DENOTATION "T")FOR HIGH TENSILE DEFORMED BAR(TYPE 2 - 460 N/mm², STEEL FABRIC - 485 N/mm² (UNLESS OTHERWISE STATED.

4.2 THE MINIMUM YIELD STRENGTH OF STEEL REINFORCEMENT (WITH DENOTATION "R")SHALL BE 250N/mm².

5. ALL WATER RETAINING STRUCTURE OR WET AREAS SHALL BE APPLIED WITH APPROVED WATER PROOFING SYSTEM.

6. IF REQUIRED R.C LINTEL BEAM OF SIZES 150 X 200 REINFORCED WITH 2T12 (T&B) & R6 -150 LINKS SHALL BE PROVIDED TO ALL DOORS AND WINDOWS. STIFFENER, COLUMN SIZES 150X150 TO 200X200 REINFORCED WITH 4T12 & T10-150 LINKS SHALL BE PROVIDED IF REQUIRED.(FOR EG. ON WALL OF MORE THAN 3.5m IN HORIZONTAL LENGTH OR VERTICAL HEIGHT)

7. INCORPORATING OF M & E REQUIREMENTS IN STRUCTURAL DRAWINGS:
THE CONTRACTOR TO PREPARE DETAILED SHOP DRAWINGS INCORPORATING ALL M & E REQUIREMENTS, OPENINGS ETC INTO THE STRUCTURAL DRAWINGS AND OBTAIN THE PROJECT STRUCTURAL ENGINEER APPROVAL BEFORE PROCEEDING WITH ANY FORM OF PERMANENT CONSTRUCTION WORKS. THE CONTRACTOR SHALL RESOLVE ALL DISCREPANCIES WITH ENGINEERS REGARDING M & E WORKS PRIOR TO CONCRETING.

8. NOTES FOR COMPACTION WORKS OF SUB-BASE AND SUB-GRADE.

1. ALL SUB-GRADE AND SUB-BASE LAYING WORKS SHALL BE WELL COMPACTED TO OVER 95% CBR.
2. MINIMUM OF FOUR NUMBER OF DRY FIELD DENSITY TESTS AND CBR TESTS SHALL BE CONDUCTED ON COMPACTED SUBGRADES AND SUB-BASE BEFORE CARRYING OUT ANY PERMANENT WORKS SUCH AS CONCRETING OF ACCESS ROAD, GARAGE NON-SUSPENDED FLOOR SLABS & HARD STANDINGS, ETC. THE TESTS RESULTS SHALL BE SUBMITTED TO CIVIL AND STRUCTURAL CONSULTANT ENGINEER FOR REVIEW AND APPROVAL TO PROCEED WITH PERMANENT WORKS (IF APPLICABLE BASIS ONLY).

9.REMOVAL OF FORMWORK
A) THE TIME FOR THE REMOVAL OF FORMWORKS IS TO BE SUBJECTED TO ENGINEER'S APPROVAL, BUT THE FOLLOWING MAY BE TAKEN AS A GUIDE TO MINIMUM TIMES APPLICABLE UNDER NORMAL CIRCUMSTANCES:

SIDE OF COLUMNS/PIERS,WALLS AND BEAMS	3 DAYS
SOFFIT OF SLABS (PROPS LEFT UNDER)	14 DAYS
PROPS OF SLABS	28 DAYS
SOFFIT OF BEAMS (PROPS LEFT UNDER)	14 DAYS
PROPS TO SOFFIT OF BEAMS	28 DAYS

B) SHUTTERING AND CENTERING SHALL BE REMOVED BY GRADUAL EASING WITHOUT JARRING, AND ONLY IN THE PRESENCE OF A COMPETENT SUPERVISER. BEFORE REMOVAL OF THE SHUTTERING, THE CONCRETE SHALL BE EXAMINED, AND REMOVAL SHALL PROCEED ONLY IF THE CONCRETE HAS ATTAINED SUFFICIENT STRENGTH TO SUPPORT ITS OWN WEIGHT AND ANYCONSTRUCTIONAL OR OTHER LOADS LIKELY TO COME UPON IT. IF ANY LOADING IN EXCESS OF THE DESIGN LOAD IS ANTICIPATED, APPROVED PROPS SHALL BE PROVIDED AFTER REMOVAL OF SHUTTERING.

C) TO ENSURE THAT THE CONSTRUCTIONAL LOADS OF A FLOOR ARE SHARED BY AT LEAST TWO FLOORS BELOW IT, THE PROPS TO THE BEAMS AND SLABS OF A FLOOR SHALL NOT BE REMOVED UNTIL THE FLOOR ABOVE THE FLOOR IN QUESTION, IS STRONG ENOUGH TO SUPPORT ITSELF.

10. GENERAL NOTES FOR PILING WORKS

1. ALL PILES TO BE USED FOR THIS PROJECT SHALL BE OF BRUNEI DARUSSALAM MINISTRY OF DEVELOPMENT'S APPROVED TYPES AND BRAND NAMES OR AS PER S.O.'S APPROVAL.
2. THE CONTRACTOR SHALL SUBMIT TO THE ENGINEER FOR APPROVAL, BEFORE ANY PILING WORK IS STARTED, DETAILS OF :-
- PILE DRIVER INCLUDING SIZE OF HAMMER AND DROP.
- CONTRACTOR'S CALCULATIONS OF SETS, CALCULATED USING THE HILEY FORMULA.
- PROPOSED PROGRAM AND SEQUENCE OF PILE DRIVING INCLUDING TEST PILES.
3. NO PILING SHALL COMMENCE UNTIL THE SET VALUES SUBMITTED BY THE CONTRACTOR ARE APPROVED IN WRITING BY THE ENGINEER.
4. THE CALCULATED SETS SHALL ONLY BE USED AS A GUIDE FOR DRIVING AND THE SET SHALL BE CONFIRMED BY THE IN-SITU PILE TEST.
5. HOWEVER, PILE HYDRAULIC JACKING TO TWICE THE SAFE WORKING LOAD (MINIMUM) SHALL BE USED IF PILE HAMMERING ACTIVITIES CAUSES DISTURBANCES AND DISTRESS (EXCESSIVE VIBRATIONS) TO SURROUNDING BUILDINGS

11. GENERAL NOTES FOR R.C PILES

R.C PILES

1. ALL REINFORCED CONCRETE (R.C.) PRECAST PILES SHALL BE 150MM X 150MM REINFORCED CONCRETE PRECAST PILES OR AS PER SPECIFIED IN THE DRAWINGS.
2. CONCRETE GRADE SHALL BE GRADE 45 MINIMUM FOR NORMAL R.C. PRECAST PILES.
3. THE ALLOWABLE SAFE BEARING CAPACITY OF EACH R.C. PRECAST PILES POINT SHALL BE 25 TONNES.
4. THE EXPECTED PENETRATION DEPTH OF EACH PILE POINT IS 6 TO 15 METRES. THIS IS TO BE CONFIRMED DURING PILE DRIVING WORKS. (UNTIL PILE SET IS ACHIEVED UNLESS OTHERWISE STATED)
5. THE PILE SET SHOULD BE ACHIEVED WITH THE LAST 10 BLOWS FOR LESS THAN 20mm PENETRATION (PILE HAMMER OF ABOUT ONE TONNE WITH HAMMER DROP OF ABOUT 600mm TO ONE METRE)
6. ALL WELDING WORKS FOR JOINING OF PILES SHALL BE CARRIED OUT BY QUALIFIED LICENSED WELDERS.
7. IF ANY OF THE PILE POINTS DOES NOT PENETRATE 6 METRES DEEP INTO THE GROUND (IF PILE SET IS ACHIEVED AT LESS THAN 6 METRES PENETRATION LENGTH), THE CLIENT OR CONTRACTOR SHALL REPORT TO THE C&S CONSULTANT FOR REDESIGN REQUIREMENT OF THE PILE FOUNDATION.

11a. MILD STEEL TUBULAR PILING

11a.1 ALL PILES SHALL BE GRADE 43 SEAMLESS MS TUBES 114.3mm ∅ x 6.3mm THICK TO B.S. 4848 PART II WITH AN ULTIMATE LOAD CAPACITY OF NOT LESS THAN 240kN.

11a.2 ALL PILING WORK SHALL BE CARRIED OUT IN ACCORDANCE TO THE GENERAL SPECIFICATION AS SHOWN IN SPECIFICATION OF MATERIALS AND WORKMANSHIP.

12. NOTES FOR PAD FOOTING

1. ALL PAD FOOTING CONSTRUCTION SHALL BE REFERRED TO THE PAD FOOTING LAYOUT PLAN N AND DETAILS
2. THE DESIGN IS BASED UPON THE GROUND BEARING CAPACITY AT ABOUT 2.0 METRES BELOW EXISTING GROUND LEVEL TO BE 150KN/m²
3. CONCRETE GRADE 30 SHALL BE USED FOR ALL PAD FOOTING WORKS

13. NOTES FOR BAKAU PILING

1. WITH A 1/2 TONNE HAMMER AND DROP OF 900mm, THE FINAL SET SHOULD NOT BE MORE THAN 75/10 BLOWS OR THE SET TO BE FINALISED BY THE ENGINEER DURING THE TEST PILING.
2. ALL BAKAU PILES SHOULD BE NOT LESS THAN 75mm Ø (ON AVERAGE), ALL PILES CUT-OFF SHALL BE AT THE LOWEST WATER LEVEL. EXACT LEVEL TO BE DETERMINED ON SITE BY THE ENGINEER.
3. IF PILE REQUIRED TO BE SPLICED TOGETHER, A TUBULAR SPLICE WITH A HEAVY PIPE 90mm Ø x 600mm LONG x 6mm THICK SHOULD BE USED AT LEAST 4 HOLES SHALL BE PROVIDED IN THE PIPE FOR DRIVING 65mm LONG NAILS SPIKE INTO THE PILE.
4. ACTUAL SPACING OF BAKAU PILES TO BE DECIDED ON SITE.

14. NOTES FOR SAFETY OF EXISTING UNDER GROUND SERVICES

1. MAIN CONTRACTOR TO CARRY OUT PILOT TRENCHING (ADEQUATE GROUND INVESTIGATION) BEFORE CARRYING OUT ANY EXCAVATION WORKS FOR DRAINAGE WORKS, PILING WOKS AND OTHER WORKS THAT MAY AFFECT THE BURIED (UNDER GROUND) EXISTING SERVICES/UTILITIES SUCH AS ELECTRICAL CABLES, FIBRE OPTIC CABLES, TELECOM CABLES, WATER PIPES. .THIS IS IMPORTANT TO PREVENT ANY DAMAGE TO SUCH SERVICES /UTILITIES SAFETY THREAT TO ALL STATEHOLDERS.

15. NOTES FOR WATERPROOFING WORKS :

1. ALL INTERNAL OR EXTERNAL SURFACES OF WATER RETAINING STRUCTURE OR WET AREAS SUCH AS TOILETS, RC ROOF SLABS, RC GUTTERS, M&E ROOMS AND KITCHENS SHALL BE WATERPROOFED WITH APPROVED WATERPROOFING SYSTEM.
2. ALL WATERPROOFING WORKS SHALL BE CARRIED OUT BY MANUFACTURER'S APPROVED INSTALLER/APPLICATOR AND SHALL BE APPLIED IN STRICT ACCORDANCE TO THE MANUFACTURER'S APPROVED PROCEDURES OR AS PER ENGINEER'S APPROVAL.
3. SUFFICIENT CURING TIME SHALL BE ALLOWED BEFORE INSTALLATION OF ANY PROTECTIVE SCREED OR ARCHITECTURAL FINISHES.
4. WATERPROOFING SYSTEMS THAT HAS BEEN APPROVED FOR INSTALLATION SHALL CARRY A 10 YEAR WARRANTY PERIOD BY THE MANUFACTURER OR BY THE MANUFACTURER'S REPRESENTATIVES OR BY THE APPROVED LOCAL DISTRIBUTOR/APPLICATOR.

16. GENERAL NOTES FOR ANY STRUCTURAL STEEL WORKS

1. MAIN CONTRACTOR SHALL SUBMIT SHOP DRAWINGS FOR ALL STEEL WORKS FOR STRUCTURAL ENGINEER'S APPROVAL BEFORE ORDERING, PURCHASING, FABRICATING AND ERECTING ANY STEEL STRUCTURAL WORKS.
2. PROPOSED CONNECTION DETAILS TO BE PROVIDED IN THE STRUCTURAL SHOP DRAWINGS FOR STRUCTURAL ENGINEER'S APPROVAL.
3. ALL STEEL SECTION MEMBERS SHALL BE SAND BLASTED BEFORE APPLYING ANY APPROVED ANTI-CORROSION COATING SYSTEM.
4. ALL WELDING WORKS SHALL BE CARRIED OUT BY QUALIFIED LICENSED WELDERS.

17. NOTES FOR TURFING :

1. ALL TURFS SHALL BE 225MM SQUARE FROM AN APPROVED SOURCE FREE FROM LALLANG AND OTHER WEEDS.
2. BLACK EARTH OF 50MM THICKNESS SHALL BE SPREAD ON TO THE GROUND WHERE TURFING IS TO BE DONE.
3. SPOT TURFING SHALL BE LAID AT 300MM CENTRES.
4. CLOSED TURFING TO BANKS SHALL BE PEGGED IN PLACE WITH 25MM DIAMETER PEGS 225MM LONG.
5. ALL TURFING SHALL BE WATERED UNTIL SATISFACTORILY ESTABLISHED AND ALL TURFING THAT HAS BECOME DEFECTIVE WITHIN SIX MONTHS SHALL BE REPLACED AT THE CONTRACTOR'S EXPENSE.
6. DURING THE PERIOD OF THE WORKS AND MAINTENANCE, THE CONTRACTOR SHALL KEEP ALL TURFED AREAS WATERED, MOWN OR CUT AND CLEARED OF GRASS CUTTING TO THE SATISFACTION OF THE ENGINEER. THE FIRST CUT SHALL BE MADE WHEN THE GRASS IS 100MM HIGH, FOLLOWED BY REGULAR CUTTING SO THAT THE VEGETATION AT NO TIME EXCEEDS 150MM IN HEIGHT.

18. DRAWING NOTE:

1. ALL STRUCTURAL DRAWING ARE DRAWN TO APPROXIMATE SCALE. ANY DISCREPANCY IN STRUCTURAL DRAWING DIMENSIONS, EXACT DIMENSION SHALL BE REFERRED TO STRUCTURAL ENGINEER.

19. GENERAL NOTES FOR FLOOR HARDENER REQUIREMENTS:

1. ALL CONCRETE SLAB SURFACES WHICH ARE NOT COVERED WITH HEAVY DUTY DECORATIVE TILES AND TO BE USED AS CAR PARKS OR ACCESS ROADS (FOR SELECTED AREAS) SHALL BE APPLIED WITH SUITABLE FLOOR HARDENERS SYSTEM (TO INCLUDE POWER FLOAT TROWELLING IF APPLICABLE)

20. GENERAL NOTES FOR BRICKWALL WORKS:

1. ALL BRICKS TO BE USED SHALL BE REGULAR IN SIZE AND APPROVED BY ABCi
2. REINFORCED CONCRETE STIFFENERS (100x100 WITH APPROPRIATE REINFORCEMENTS)SHALL BE PROVIDED AT EVERY INTERVAL OF 3.5m OF BRICK WORK LENGTH

21. NOTES FOR WORKPLACE SAFETY, HEALTH AND ENVIRONMENT COMPLIANCE & INSURANCES & TEMPORARY WORKS:

1. MAIN CONTRACTOR SHALL ENSURE TO COMPLY FULLY WITH ALL PREVAILING RULES, REGULATIONS AND LAWS OF NEGARA BRUNEI DARUSSALAM ON WORKPLACE SAFETY, HEALTH AND ENVIRONMENTAL ASPECTS THROUGHOUT THE DURATION OF THE CONSTRUCTION PERIOD AND DEFECTS LIABILITY PERIOD
2. MAIN CONTRACTOR SHALL ENSURE THAT ALL APPLICABLE INSURANCES ARE VALID THROUGHOUT THE CONSTRUCTION PERIOD AND DEFECTS LIABILITY PERIOD SUCH AS CONTRACTOR'S ALL RISK INSURANCE OR OTHERS SUCH AS WORKMEN COMPENSATION INSURANCE POLICY, PUBLIC LIABILITY INSURANCE POLICY AND FIRE INSURANCE POLICY(WHICHEVER IS APPLICABLE AS PER SUPERINTENDING OFFICERS INSTRUCTIONS)
3. MAIN CONTRACTOR SHALL EMPLOY INDEPENDENT CONSULTANT TO CARRYOUT DESIGN WORKS FOR ALL TEMPORARY WORKS AND THAT SUCH TEMPORARY WORKS DESIGN REQUIREMENT ARE FULLY COMPLIED DURING ITS EXECUTION

22. NOTES FOR ROOF TRUSSES:

1. ROOF TRUSSES SHALL BE LIGHTWEIGHT PROPRIETARY SYSTEM SUCH AS LYSAGTH SMART TRUSS SYSTEM OR APPROVED TECHNICAL EQUIVALENT SHALL BE DESIGNED BY MANUFACTURER COMPANY.
2. THE INSTALLATION WORKS SHALL BE CARRIED OUT BY MANUFACTURER'S APPROVED INSTALLER.

SERI BUMI CONSULTANT
Unit 14, 2nd Flr, Blk. A, Gadong Central, Spg. 21, Gadong
BRUNEI

(sbc)
SERI BUMI CONSULTANT
CIVIL & STRUCTURAL ENGINEERING CONSULTANT
No: 14, 2nd FLOOR, BLOCK A, GADONG CENTRAL, SIMPANG 21, JALAN GADONG, BSB, BRUNEI DARUSSALAM
TEL: 673-2427275 FAX: 673-2427279
E-MAIL: sbc.brunei@gmail.com

CLIENT:

NO.	AMENDMENTS	BY	DATE

DESIGNED BY	THAN ZAW TUN	
DRAWN BY	SAI	
CHECKED BY	MD. YUNUS	
APPROVED BY		DATE 14/09/2022

SCALE: N.T.S

TITLE: GENERAL NOTES

PROJECT: PROPOSED NEW 1 UNIT STANDARD DESIGN OF FARM LABOUR QUARTERS, BRUNEI DARUSSALAM (FOR 5 PERSONS) -OPTION 1

JOB NO:

SHEET NO:

DRAWING NO: SBC/Q366/AFLQ/5P/ST/G - 100

REV:

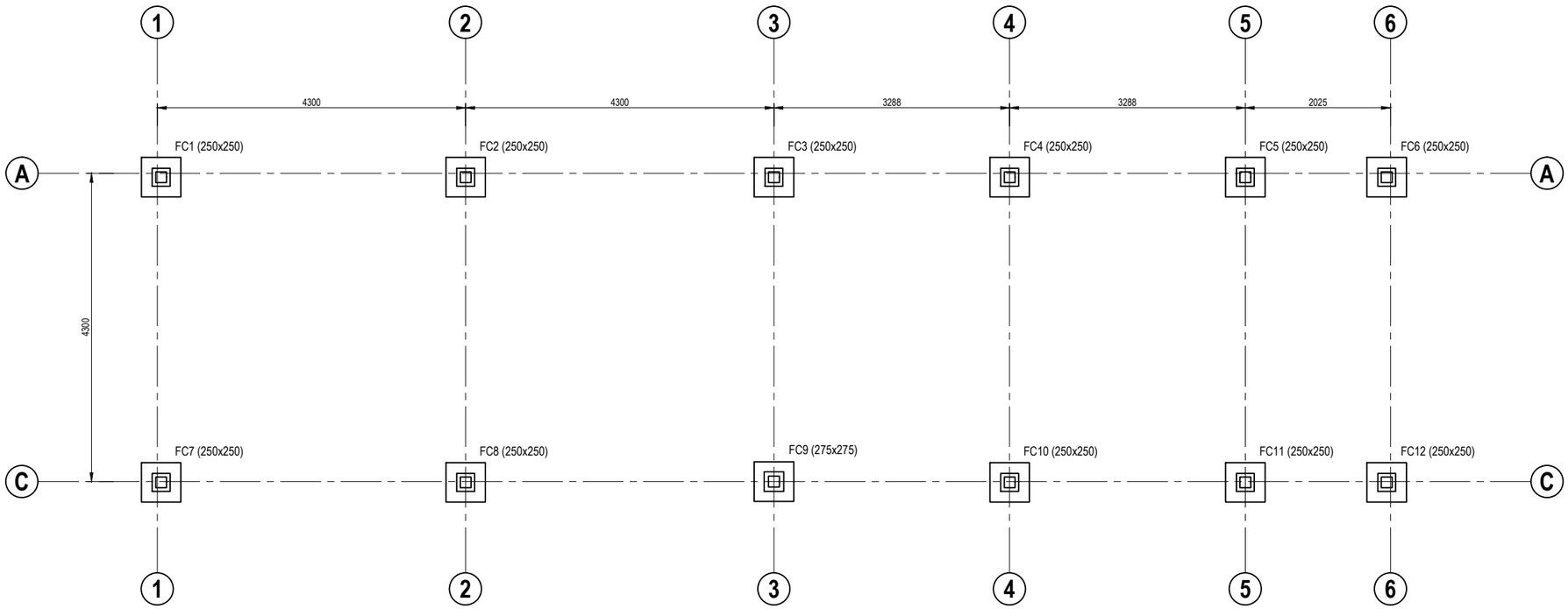

150x150mm R.C PRECAST PILE FOUNDATION LAYOUT PLAN

SCALE 1 : 75

F1(TYPE A) 600 / 600 (d = 600)

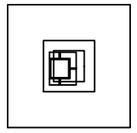

F1(TYPE B) 600 / 600 (d = 600)

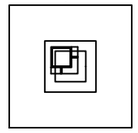

F1(TYPE C) 600 / 600 (d = 600)

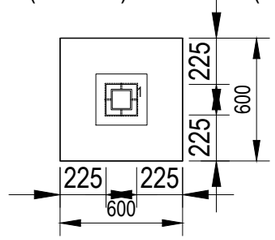

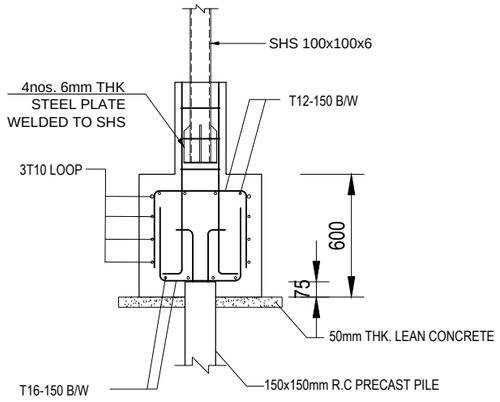

SERI BUMI CONSULTANT
Unit 14,
2nd Flr, Blk. A,
Gadong Central,
Spg. 21, Gadong
BRUNEI

(sbc)
SERI BUMI CONSULTANT
CIVIL & STRUCTURAL ENGINEERING CONSULTANT
No: 14, 2nd FLOOR, BLOCK A, GADONG CENTRAL, SIMPANG 21, JALAN GADONG, BSB, BRUNEI DARUSSALAM
TEL: 673-2427275 FAX: 673-2427279
E-MAIL: sbc.brunei@gmail.com

CLIENT:

NO.	AMENDMENTS	BY	DATE

DESIGNED BY	THAN ZAW TUN	
DRAWN BY	SAI	
CHECKED BY	MD. YUNUS	
APPROVED BY		DATE 14/09/2022

SCALE: 1:75

TITLE: 125x125mm R.C PRECAST PILE FOUNDATION LAYOUT PLAN

PROJECT: PROPOSED NEW 1 UNIT STANDARD DESIGN OF FARM LABOUR QUARTERS, BRUNEI DARUSSALAM (FOR 5 PERSONS) -OPTION 1

JOB NO:

SHEET NO:

DRAWING NO: SBC/Q366/AFLQ/5P/ST/CS - 100

REV:

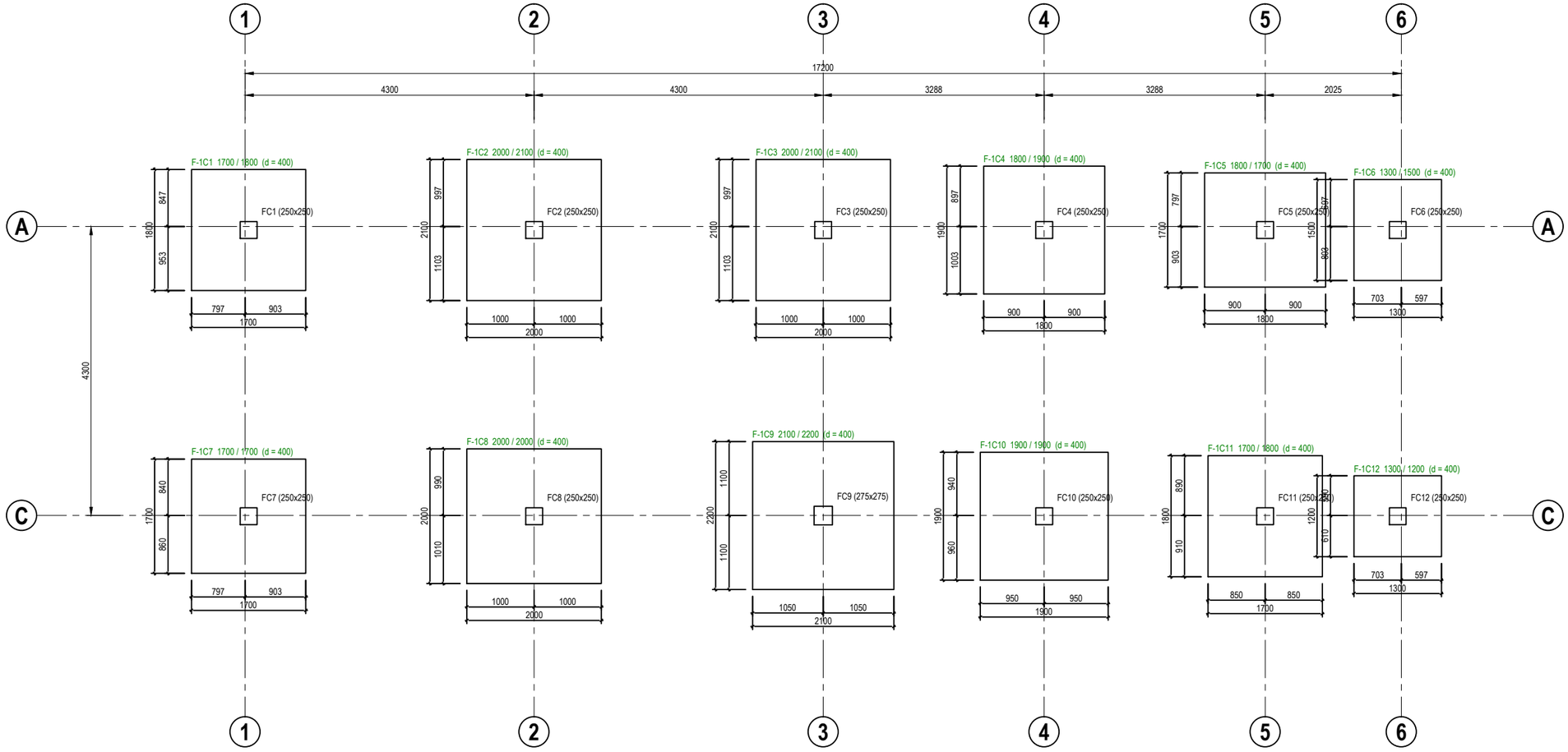

PAD FOOTING FOUNDATION LAYOUT PLAN [ALLOWABLE STRESS OF SOIL 100 kN/m²]

SCALE 1 : 75

SERI BUMI CONSULTANT
Unit 14,
2nd Flr, Blk. A,
Gadong Central,
Spg. 21, Gadong
BRUNEI

(sbc)
SERI BUMI CONSULTANT
CIVIL & STRUCTURAL ENGINEERING CONSULTANT
No: 14, 2nd FLOOR, BLOCK A, GADONG CENTRAL, SIMPANG 21, JALAN GADONG, BSB, BRUNEI DARUSSALAM
TEL: 673-2427275 FAX: 673-2427279
E-MAIL: sbc.brunei@gmail.com

CLIENT:

NO.	AMENDMENTS	BY	DATE

DESIGNED BY	THAN ZAW TUN	
DRAWN BY	SAI	
CHECKED BY	MD. YUNUS	
APPROVED BY		DATE 14/09/2022

SCALE: 1:75

TITLE: PAD FOOTING FOUNDATION LAYOUT PLAN [ALLOWABLE STRESS OF SOIL 100 kN/m²]

PROJECT: PROPOSED NEW 1 UNIT STANDARD DESIGN OF FARM LABOUR QUARTERS, BRUNEI DARUSSALAM (FOR 5 PERSONS) -OPTION 1

JOB NO:

SHEET NO:

DRAWING NO: SBC/Q366/AFLQ/5P/ST/CS - 101

REV:

F-1C1 1700 / 1800 (d = 400)

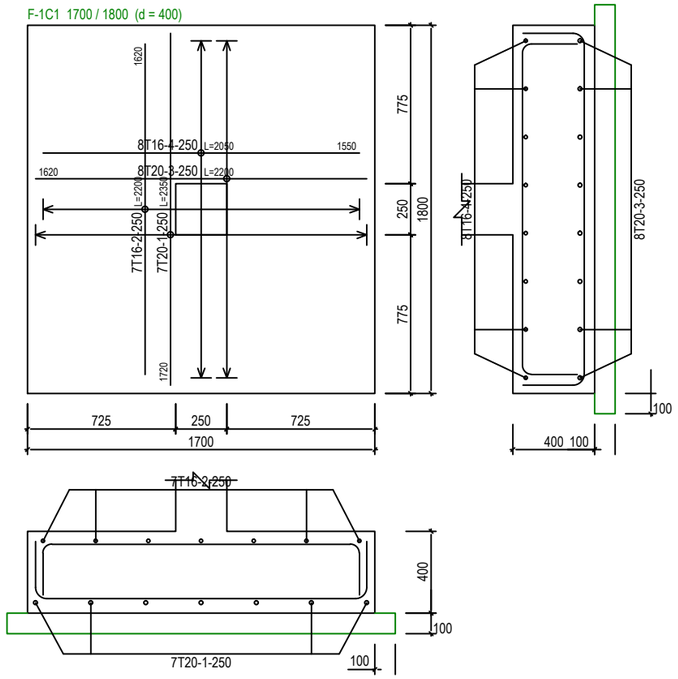

F-1C3 2000 / 2100 (d = 400)

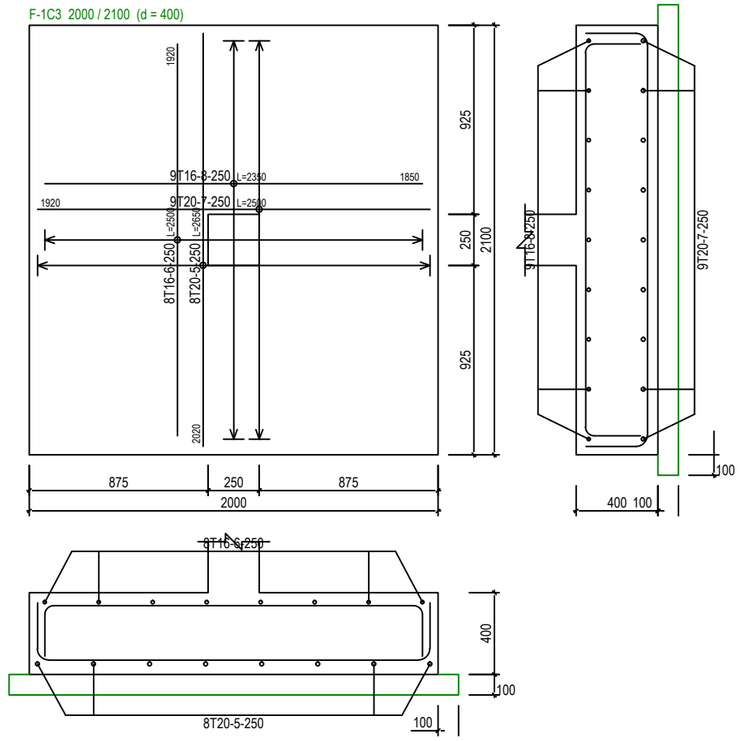

F-1C12 1300 / 1200 (d = 400)

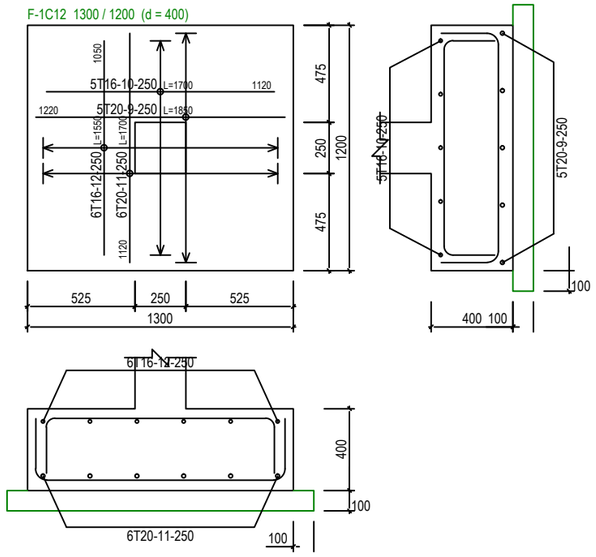

F-1C4 1800 / 1900 (d = 400)

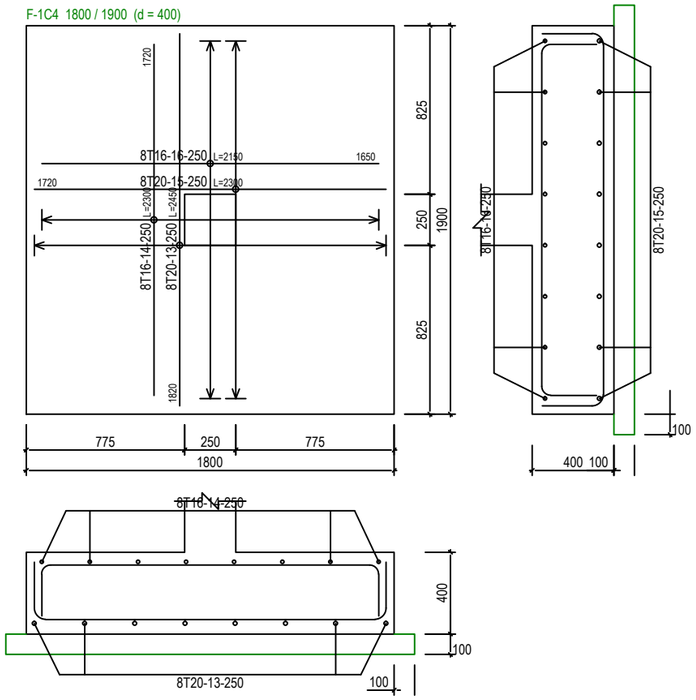

F-1C10 1900 / 1900 (d = 400)

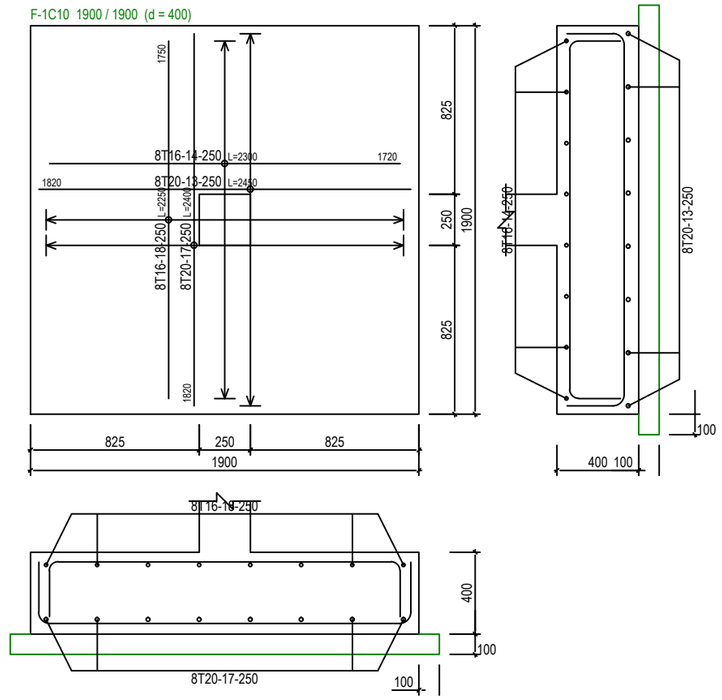

F-1C7 1700 / 1700 (d = 400)

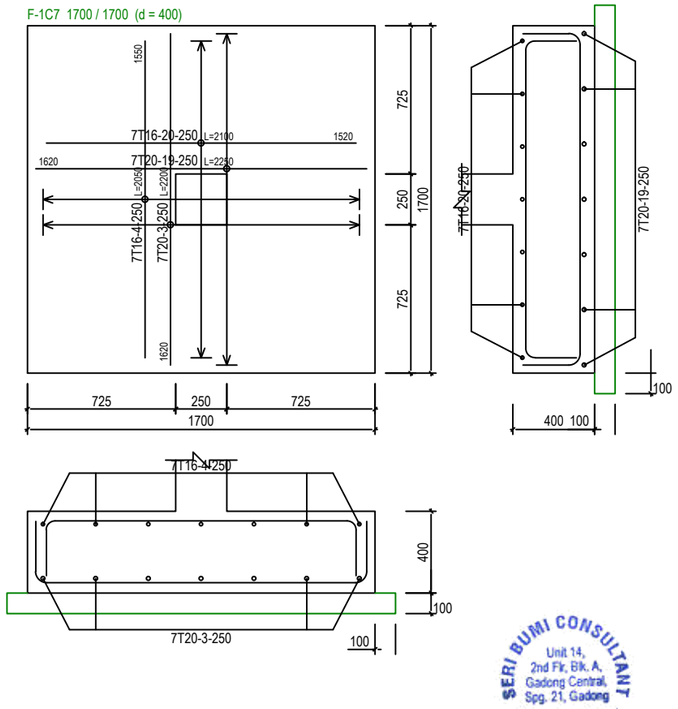

PAD FOOTING DETAILS - 1 [ALLOWABLE STRESS OF SOIL 100 kN/m²]

SCALE 1:30

SERI BUMI CONSULTANT Unit 14, 2nd Flr, Blk. A, Gadong Central, Spg. 21, Gadong BRUNEI

SERI BUMI CONSULTANT
CIVIL & STRUCTURAL ENGINEERING CONSULTANT
No: 14, 2nd FLOOR, BLOCK A, GADONG CENTRAL, SIMPANG 21, JALAN GADONG, BSB, BRUNEI DARUSSALAM
TEL: 673-2427275 FAX: 673-2427279
E-MAIL: sbc.brunei@gmail.com

CLIENT:

NO.	AMENDMENTS	BY	DATE

DESIGNED BY	THAN ZAW TUN	
DRAWN BY	SAI	
CHECKED BY	MD. YUNUS	
APPROVED BY		DATE 14/09/2022

SCALE: 1:30

TITLE: PAD FOOTING DETAILS - 1 [ALLOWABLE STRESS OF SOIL 100 kN/m²]

PROJECT: PROPOSED NEW 1 UNIT STANDARD DESIGN OF FARM LABOUR QUARTERS, BRUNEI DARUSSALAM (FOR 5 PERSONS) -OPTION 1

JOB NO:

SHEET NO:

DRAWING NO: SBC/Q366/AFLQ/5P/ST/CS - 101A

REV:

F-1C9 2100 / 2200 (d = 400)

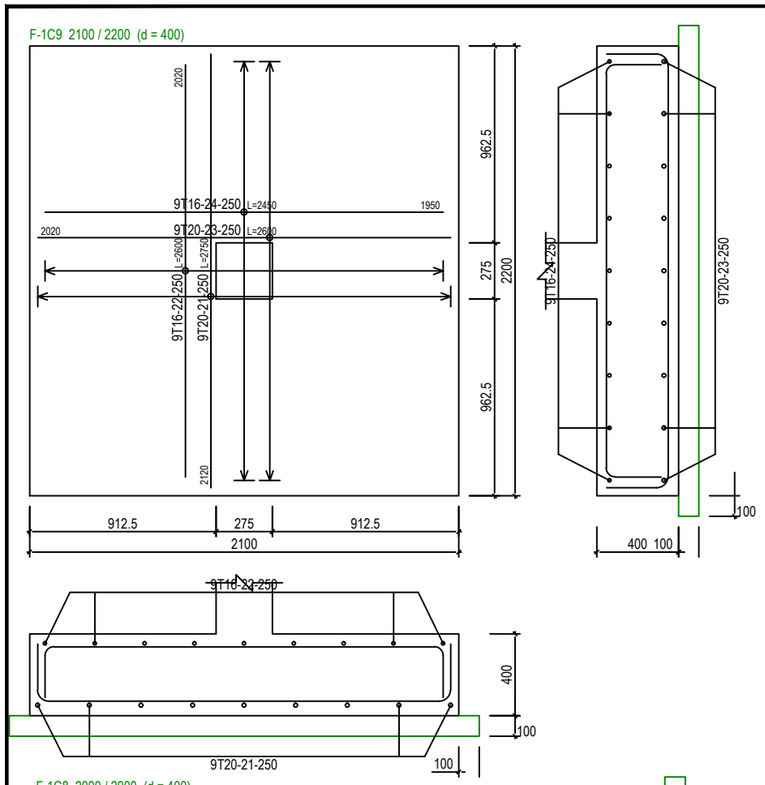

F-1C11 1700 / 1800 (d = 400)

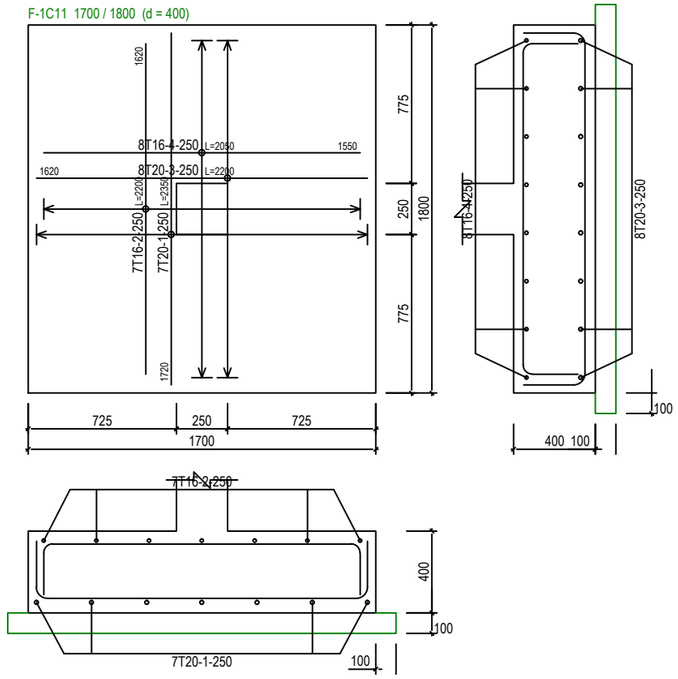

F-1C2 2000 / 2100 (d = 400)

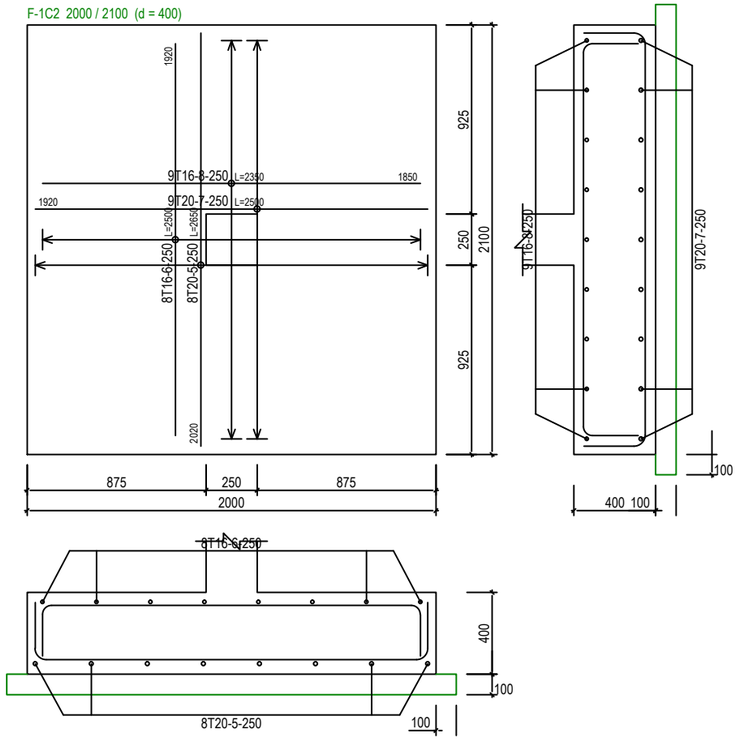

F-1C8 2000 / 2000 (d = 400)

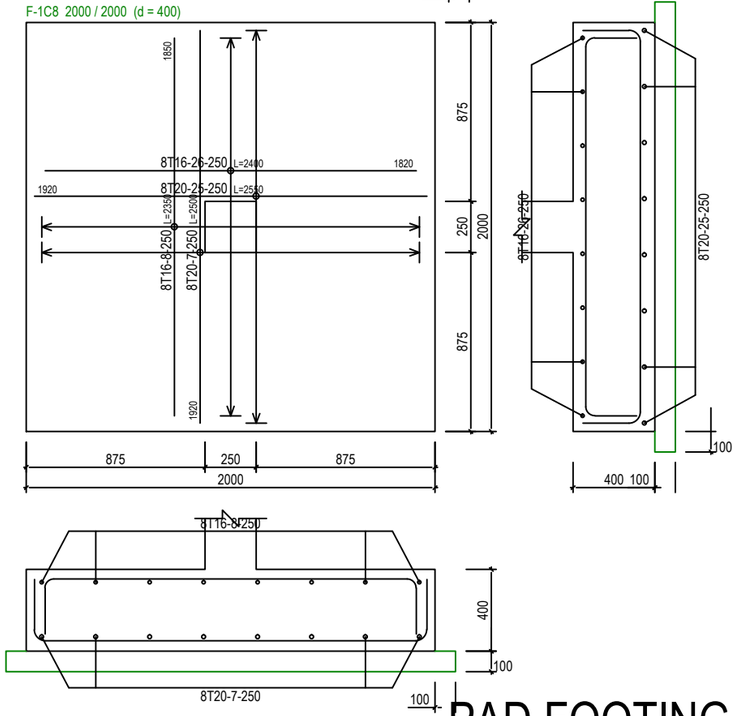

F-1C5 1800 / 1700 (d = 400)

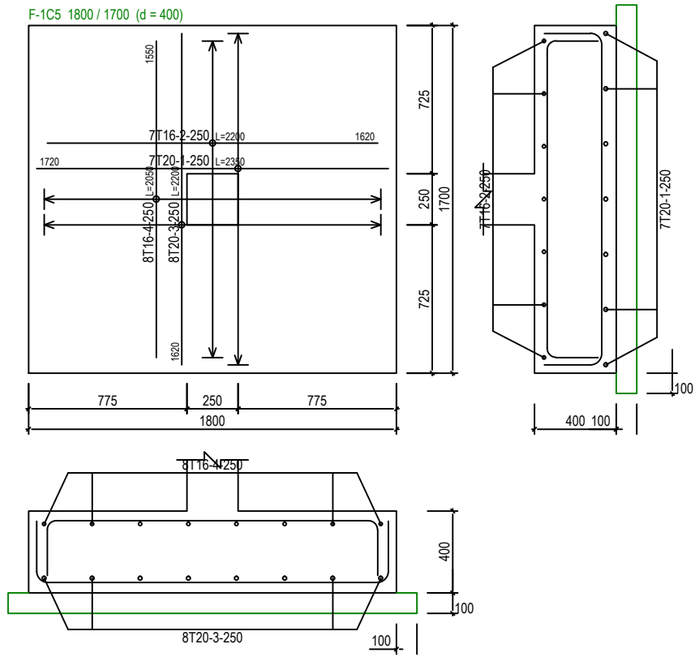

F-1C6 1300 / 1500 (d = 400)

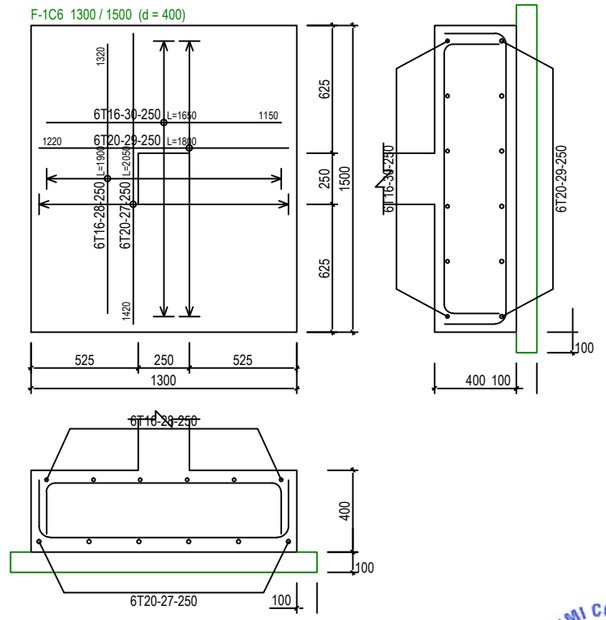

PAD FOOTING DETAILS - 2 [ALLOWABLE STRESS OF SOIL 100 kN/m²]

SCALE 1:30

SERI BUMI CONSULTANT Unit 14, 2nd Flr, Blk. A, Gadong Central, Spg. 21, Gadong BRUNEI

(sbc) SERI BUMI CONSULTANT
CIVIL & STRUCTURAL ENGINEERING CONSULTANT
No: 14, 2nd FLOOR, BLOCK A, GADONG CENTRAL, SIMPANG 21, JALAN GADONG, BSB, BRUNEI DARUSSALAM
TEL: 673-2427275 FAX: 673-2427279
E-MAIL: sbc.brunei@gmail.com

CLIENT:

NO.	AMENDMENTS	BY	DATE

DESIGNED BY	THAN ZAW TUN	
DRAWN BY	SAI	
CHECKED BY	MD. YUNUS	
APPROVED BY		DATE 14/09/2022

SCALE: 1:30

TITLE: PAD FOOTING DETAILS - 2 [ALLOWABLE STRESS OF SOIL 100 kN/m²]

PROJECT: PROPOSED NEW 1 UNIT STANDARD DESIGN OF FARM LABOUR QUARTERS, BRUNEI DARUSSALAM (FOR 5 PERSONS) -OPTION 1

JOB NO:

SHEET NO:

DRAWING NO: SBC/Q366/AFLQ/5P/ST/CS - 101B

REV:

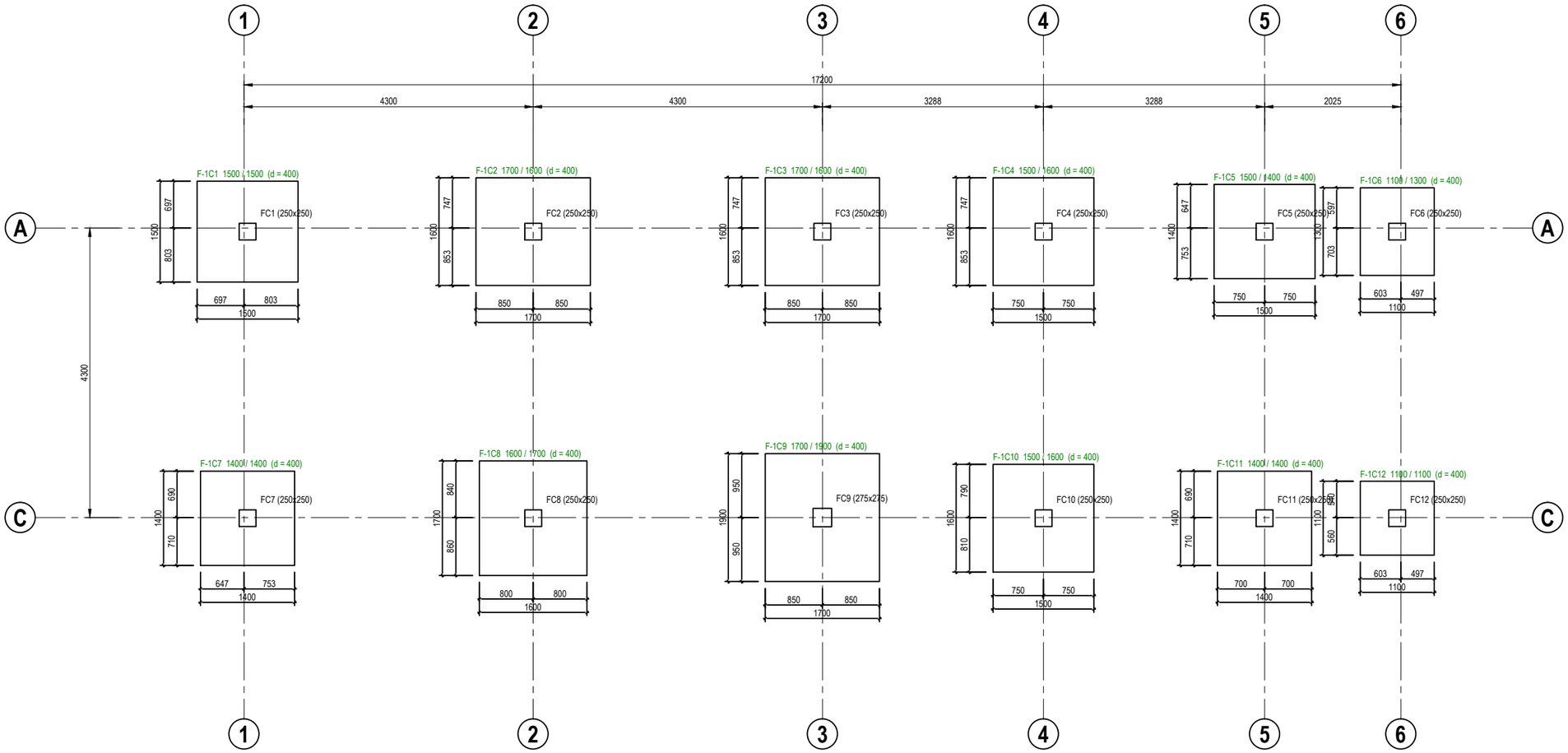

PAD FOOTING FOUNDATION LAYOUT PLAN [ALLOWABLE STRESS OF SOIL 150 kN/m²]

SCALE 1 : 75

SERI BUMI CONSULTANT
Unit 14,
2nd Flr, Blk. A,
Gadong Central,
Spg. 21, Gadong
BRUNEI

(sbc)
SERI BUMI CONSULTANT
CIVIL & STRUCTURAL ENGINEERING CONSULTANT
No: 14, 2nd FLOOR, BLOCK A, GADONG CENTRAL, SIMPANG 21, JALAN GADONG, BSB, BRUNEI DARUSSALAM
TEL: 673-2427275 FAX: 673-2427279
E-MAIL: sbc.brunei@gmail.com

CLIENT:

NO.	AMENDMENTS	BY	DATE

DESIGNED BY	THAN ZAW TUN	
DRAWN BY	SAI	
CHECKED BY	MD. YUNUS	
APPROVED BY		DATE 14/09/2022

SCALE: 1:30

TITLE: PAD FOOTING FOUNDATION LAYOUT PLAN [ALLOWABLE STRESS OF SOIL 150 kN/m²]

PROJECT: PROPOSED NEW 1 UNIT STANDARD DESIGN OF FARM LABOUR QUARTERS, BRUNEI DARUSSALAM (FOR 5 PERSONS) -OPTION 1

JOB NO:

SHEET NO:

DRAWING NO: SBC/Q366/AFLQ/5P/ST/CS - 100

REV:

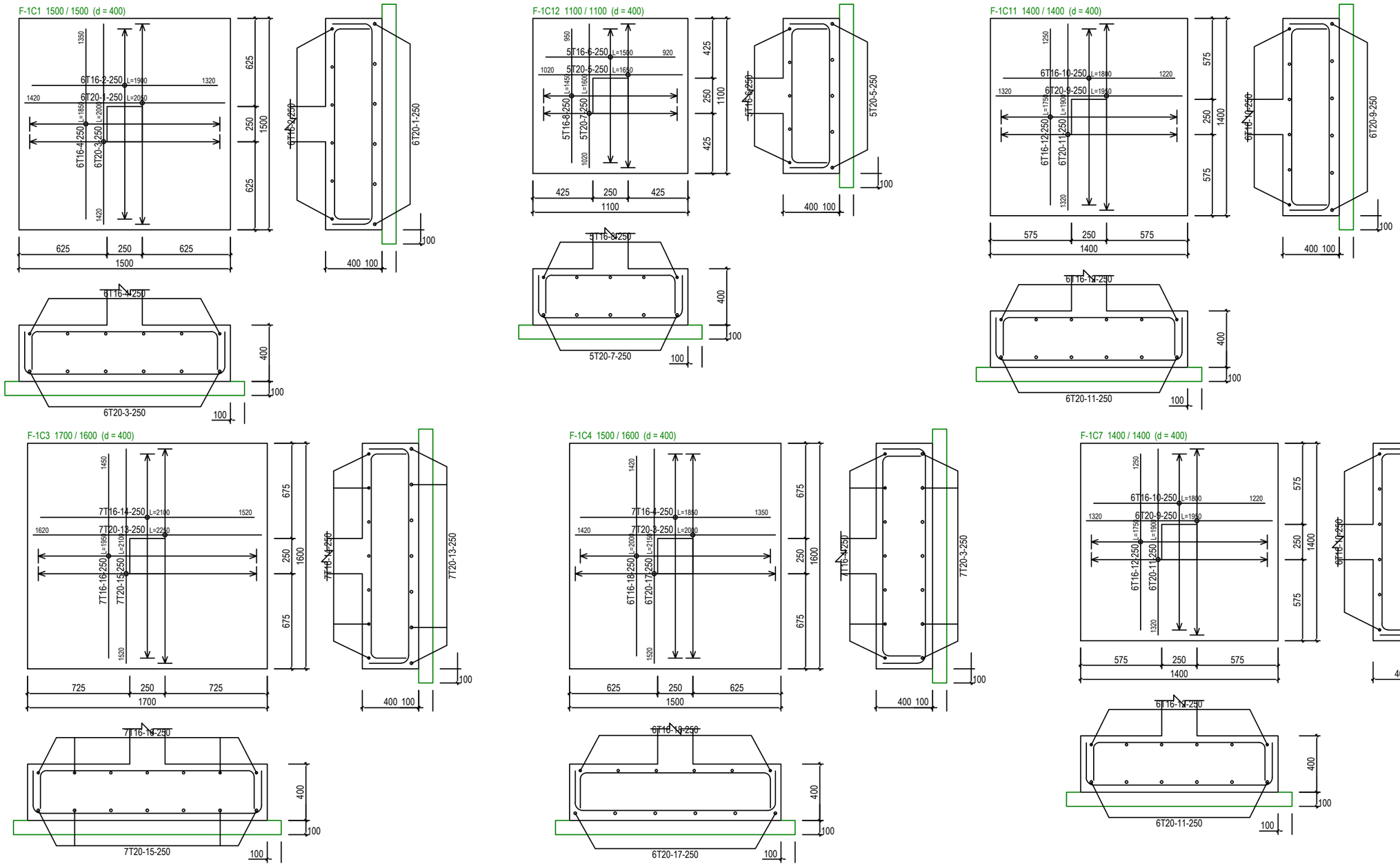

PAD FOOTING DETAILS - 1 [ALLOWABLE STRESS OF SOIL 150 kN/m²]

SCALE 1:30

SERI BUMI CONSULTANT Unit 14, 2nd Flr, Blk. A, Gadong Central, Spg. 21, Gadong BRUNEI

SERI BUMI CONSULTANT
CIVIL & STRUCTURAL ENGINEERING CONSULTANT
No: 14, 2nd FLOOR, BLOCK A, GADONG CENTRAL, SIMPANG 21, JALAN GADONG, BSB, BRUNEI DARUSSALAM
TEL: 673-2427275 FAX: 673-2427279
E-MAIL: sbc.brunei@gmail.com

CLIENT:

NO.	AMENDMENTS	BY	DATE

DESIGNED BY	THAN ZAW TUN	
DRAWN BY	SAI	
CHECKED BY	MD. YUNUS	
APPROVED BY		DATE 14/09/2022

SCALE: 1:30

TITLE: PAD FOOTING DETAILS - 1 [ALLOWABLE STRESS OF SOIL 150 kN/m²]

PROJECT: PROPOSED NEW 1 UNIT STANDARD DESIGN OF FARM LABOUR QUARTERS, BRUNEI DARUSSALAM (FOR 5 PERSONS) -OPTION 1

JOB NO:

SHEET NO:

DRAWING NO: SBC/Q366/AFLQ/5P/ST/CS - 102A

REV:

F-1C5 1500 / 1400 (d = 400)

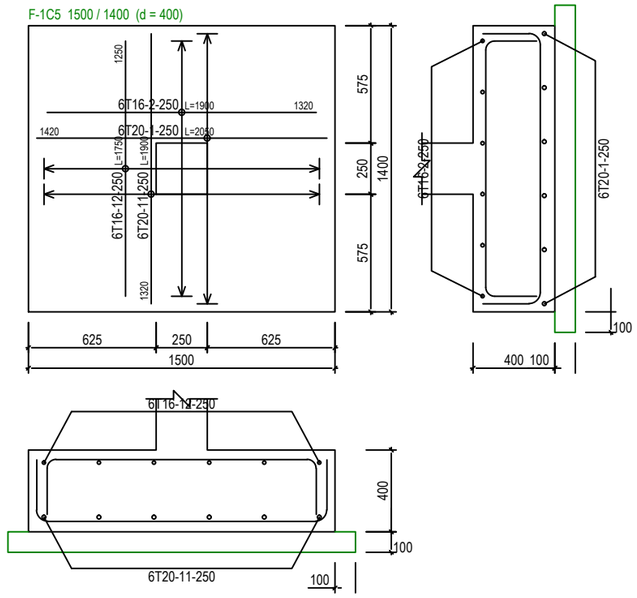

F-1C9 1700 / 1900 (d = 400)

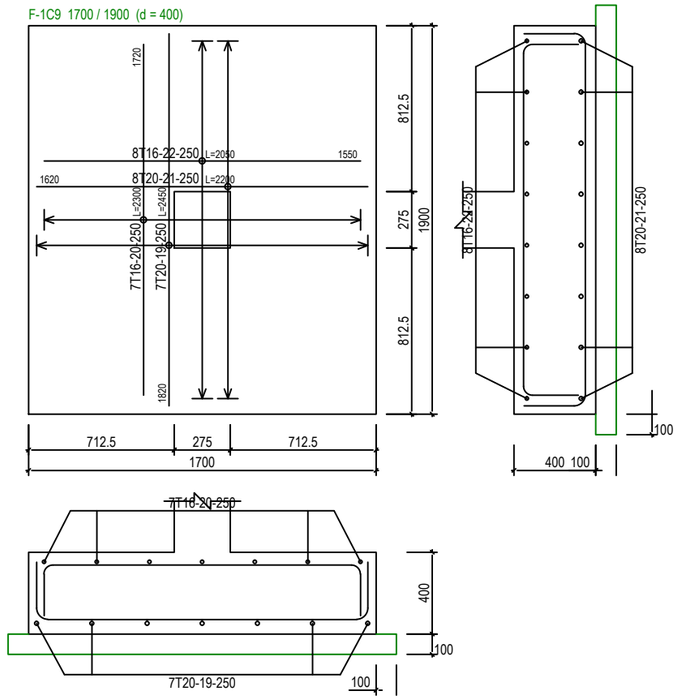

F-1C2 1700 / 1600 (d = 400)

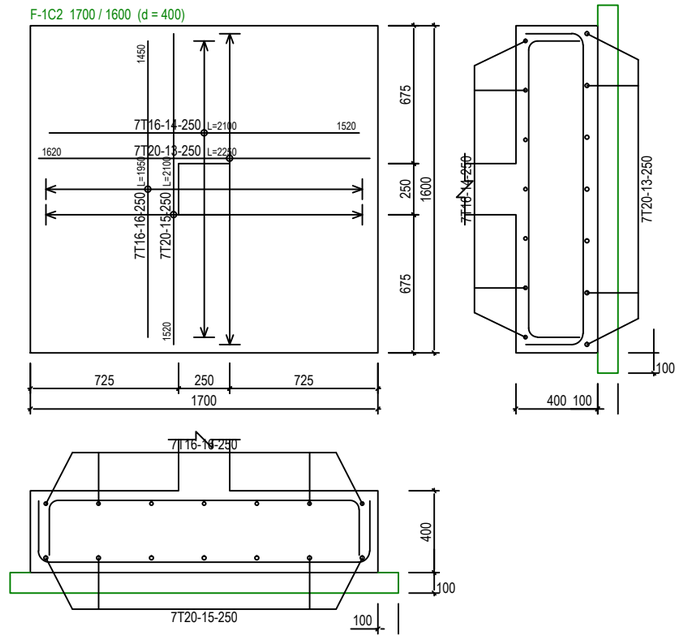

F-1C10 1500 / 1600 (d = 400)

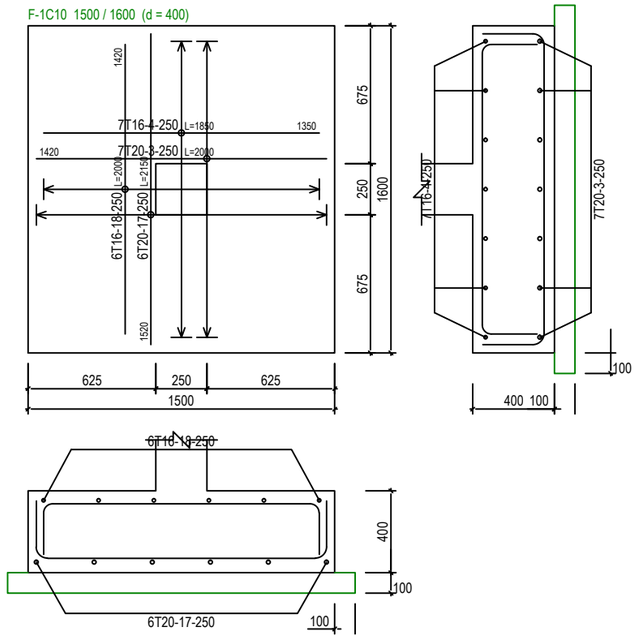

F-1C6 1100 / 1300 (d = 400)

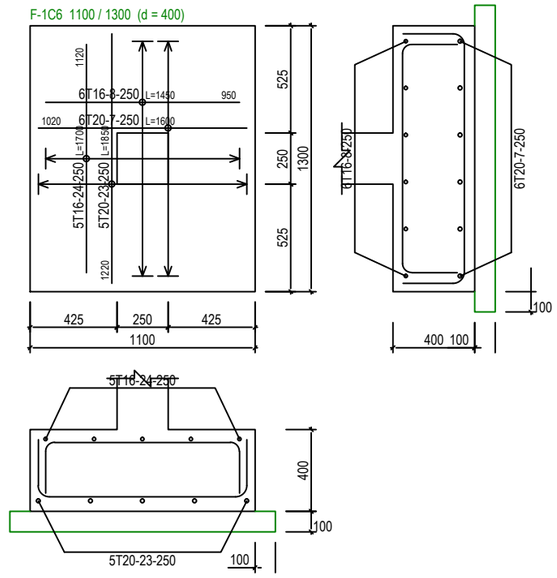

F-1C8 1600 / 1700 (d = 400)

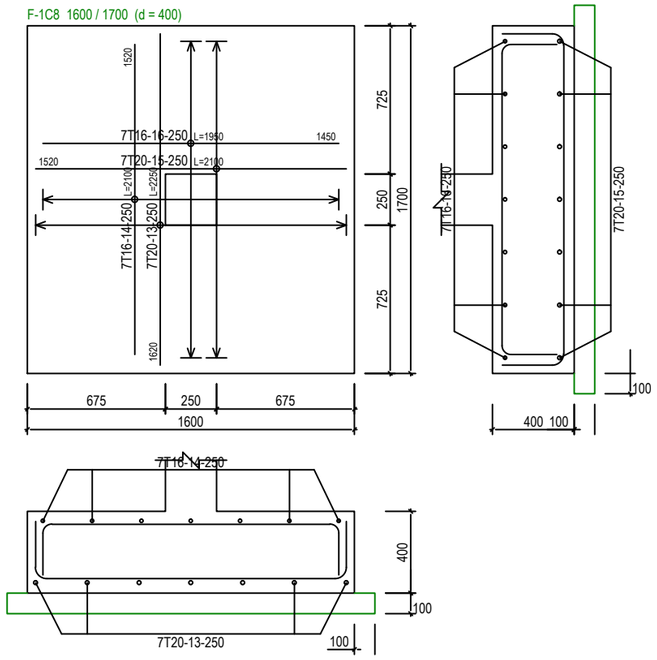

PAD FOOTING DETAILS - 2 [ALLOWABLE STRESS OF SOIL 150 kN/m²]

SCALE 1:30

SERI BUMI CONSULTANT Unit 14, 2nd Flr, Blk. A, Gadong Central, Spg. 21, Gadong BRUNEI

(sbc) SERI BUMI CONSULTANT
CIVIL & STRUCTURAL ENGINEERING CONSULTANT
No: 14, 2nd FLOOR, BLOCK A, GADONG CENTRAL, SIMPANG 21, JALAN GADONG, BSB, BRUNEI DARUSSALAM
TEL: 673-2427275 FAX: 673-2427279
E-MAIL: sbc.brunei@gmail.com

CLIENT:

NO.	AMENDMENTS	BY	DATE

DESIGNED BY	THAN ZAW TUN	
DRAWN BY	SAI	
CHECKED BY	MD. YUNUS	
APPROVED BY		DATE 14/09/2022

SCALE: 1:30

TITLE: PAD FOOTING DETAILS - 2 [ALLOWABLE STRESS OF SOIL 150 kN/m²]

PROJECT: PROPOSED NEW 1 UNIT STANDARD DESIGN OF FARM LABOUR QUARTERS, BRUNEI DARUSSALAM (FOR 5 PERSONS) -OPTION 1

JOB NO:

SHEET NO:

DRAWING NO: SBC/Q366/AFLQ/5P/ST/CS - 102B

REV:

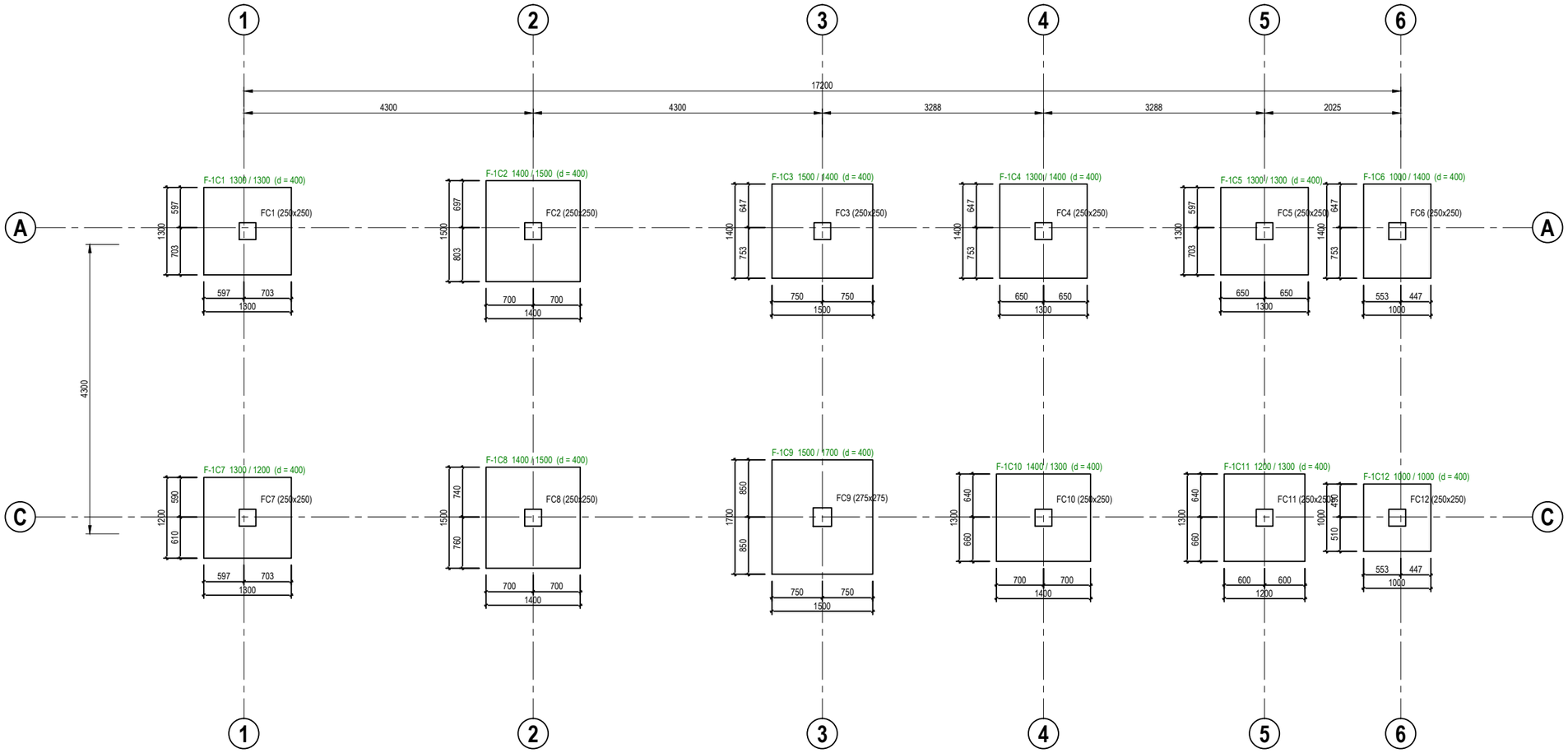

PAD FOOTING FOUNDATION LAYOUT PLAN [ALLOWABLE STRESS OF SOIL 200 kN/m²]

SCALE 1 : 75

SERI BUMI CONSULTANT
Unit 14,
2nd Flr, Blk. A,
Gadong Central,
Spg. 21, Gadong
BRUNEI

(sbc)
SERI BUMI CONSULTANT
CIVIL & STRUCTURAL ENGINEERING CONSULTANT
No: 14, 2nd FLOOR, BLOCK A, GADONG CENTRAL, SIMPANG 21, JALAN GADONG, BSB, BRUNEI DARUSSALAM
TEL: 673-2427275 FAX: 673-2427279
E-MAIL: sbc.brunei@gmail.com

CLIENT:

NO.	AMENDMENTS	BY	DATE

DESIGNED BY	THAN ZAW TUN	
DRAWN BY	SAI	
CHECKED BY	MD. YUNUS	
APPROVED BY		DATE 14/09/2022

SCALE: 1:30

TITLE: PAD FOOTING FOUNDATION LAYOUT PLAN [ALLOWABLE STRESS OF SOIL 200 kN/m²]

PROJECT: PROPOSED NEW 1 UNIT STANDARD DESIGN OF FARM LABOUR QUARTERS, BRUNEI DARUSSALAM (FOR 5 PERSONS) -OPTION 1

JOB NO:

SHEET NO:

DRAWING NO: SBC/Q366/AFLQ/5P/ST/CS - 100

REV:

F-1C5 1300 / 1300 (d = 400)

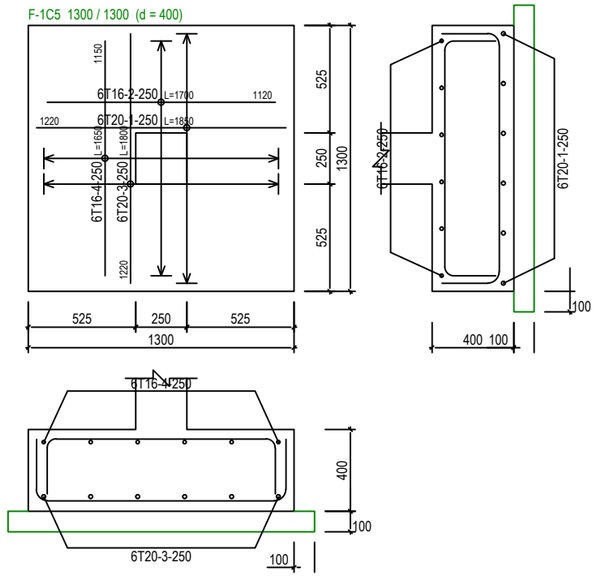

F-1C8 1400 / 1500 (d = 400)

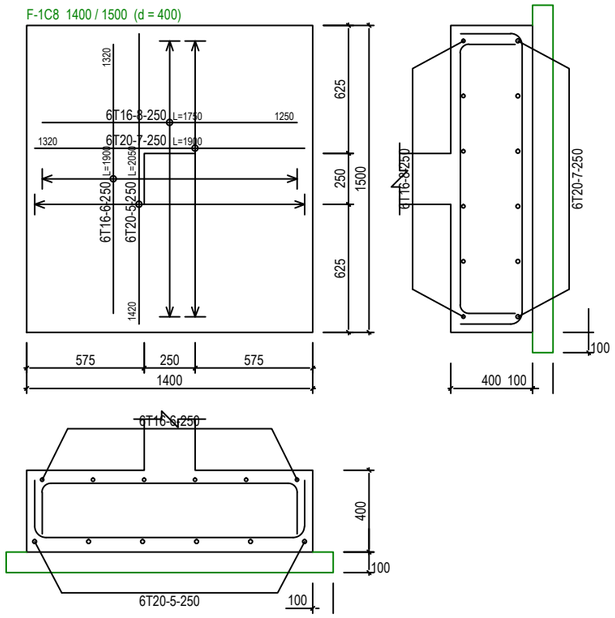

F-1C1 1300 / 1300 (d = 400)

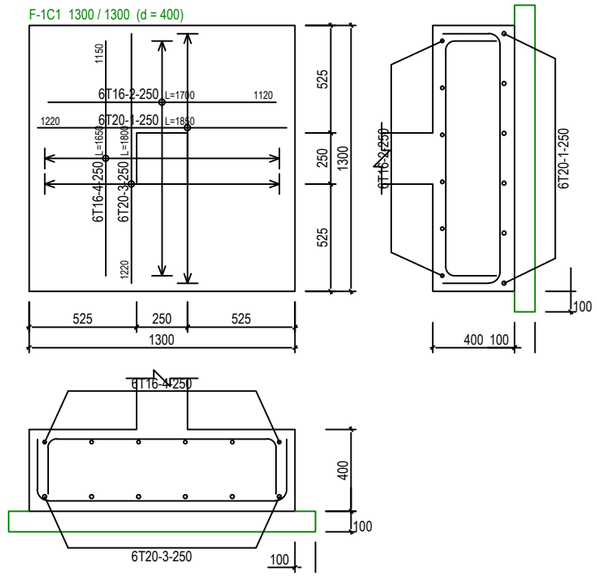

F-1C6 1000 / 1400 (d = 400)

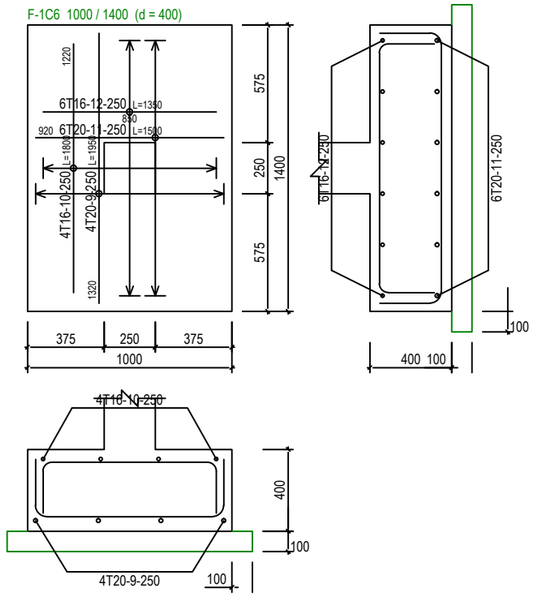

F-1C12 1000 / 1000 (d = 400)

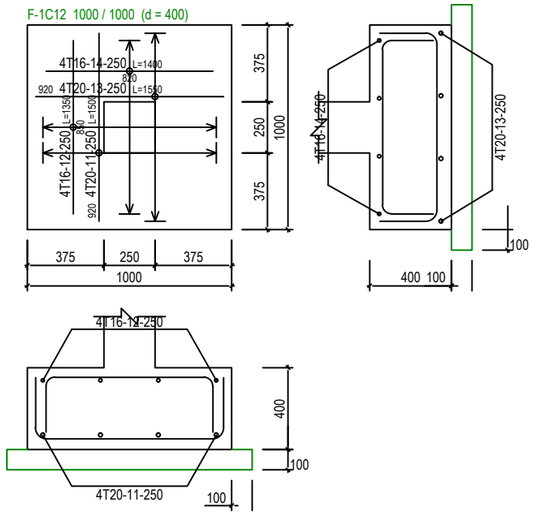

F-1C3 1500 / 1400 (d = 400)

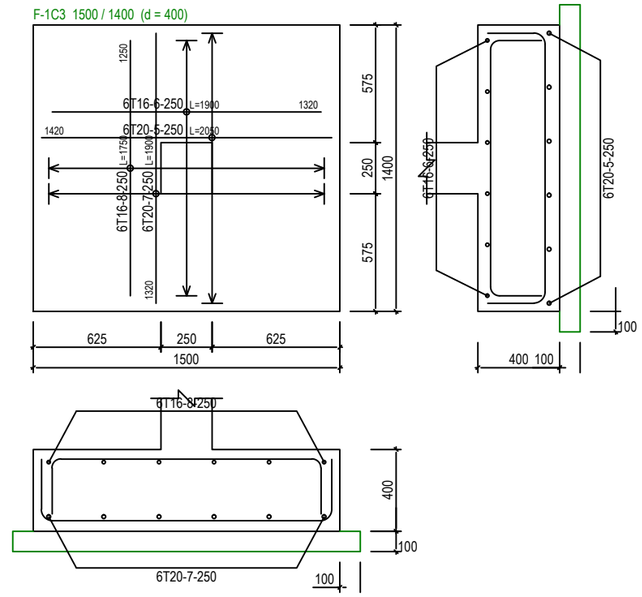

PAD FOOTING DETAILS - 1 [ALLOWABLE STRESS OF SOIL 200 kN/m²]

SCALE 1:30

SERI BUMI CONSULTANT Unit 14, 2nd Flr, Blk. A, Gadong Central, Spg. 21, Gadong BRUNEI

(sbc) SERI BUMI CONSULTANT
CIVIL & STRUCTURAL ENGINEERING CONSULTANT
No: 14, 2nd FLOOR, BLOCK A, GADONG CENTRAL, SIMPANG 21, JALAN GADONG, BSB, BRUNEI DARUSSALAM
TEL: 673-2427275 FAX: 673-2427279
E-MAIL: sbc.brunei@gmail.com

CLIENT:

NO.	AMENDMENTS	BY	DATE

DESIGNED BY	THAN ZAW TUN	
DRAWN BY	SAI	
CHECKED BY	MD. YUNUS	
APPROVED BY		DATE 14/09/2022

SCALE: 1:30

TITLE: PAD FOOTING DETAILS - 1 [ALLOWABLE STRESS OF SOIL 200 kN/m²]

PROJECT: PROPOSED NEW 1 UNIT STANDARD DESIGN OF FARM LABOUR QUARTERS, BRUNEI DARUSSALAM (FOR 5 PERSONS) -OPTION 1

JOB NO:

SHEET NO:

DRAWING NO: SBC/Q366/AFLQ/5P/ST/CS - 103A

REV:

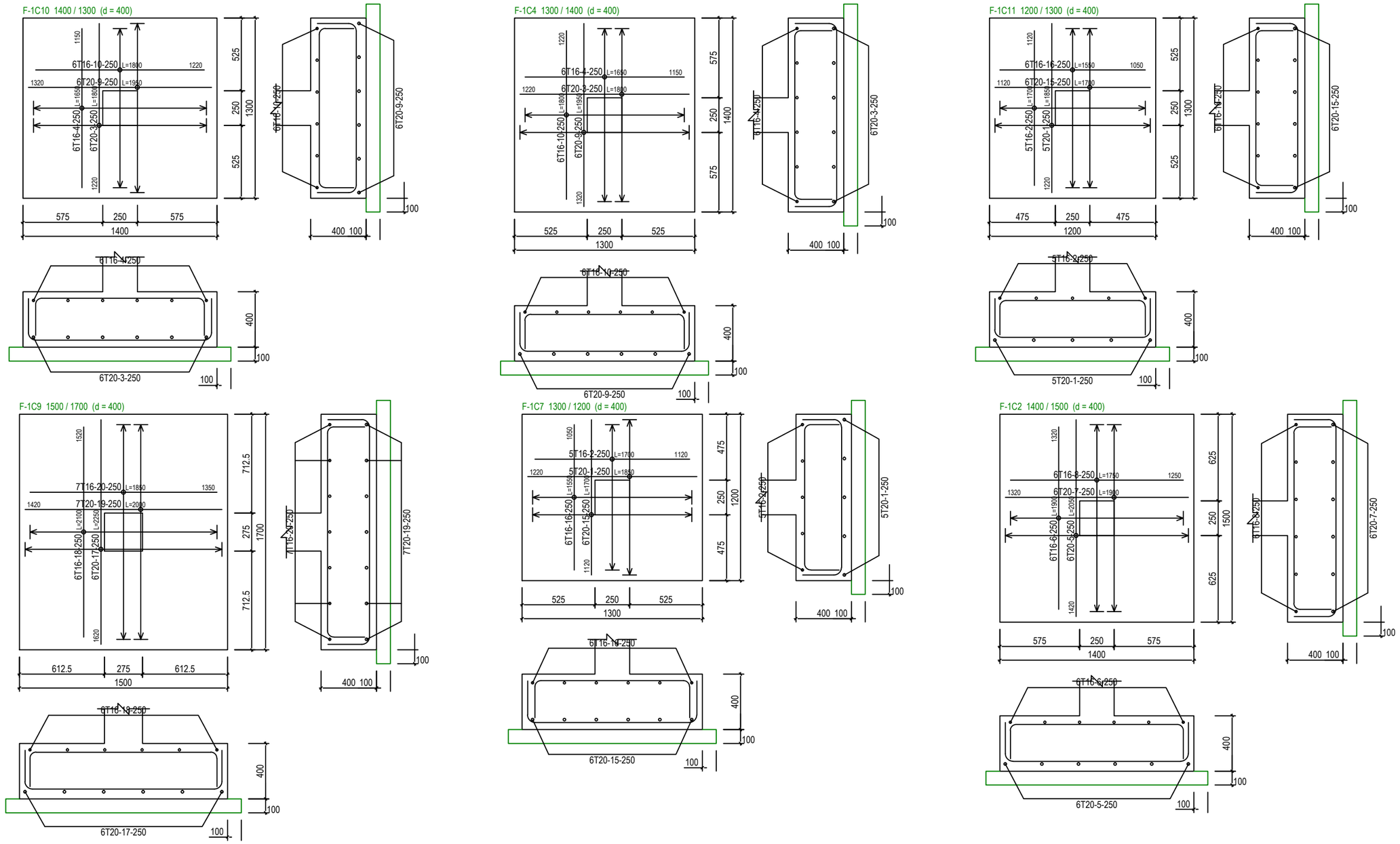

PAD FOOTING DETAILS - 2 [ALLOWABLE STRESS OF SOIL 200 kN/m²]

SCALE 1:30

SERI BUMI CONSULTANT
Unit 14, 2nd Flr, Blk. A, Gadong Central, Spg. 21, Gadong
BRUNEI

(sbc)
SERI BUMI CONSULTANT
CIVIL & STRUCTURAL ENGINEERING CONSULTANT
No: 14, 2nd FLOOR, BLOCK A, GADONG CENTRAL, SIMPANG 21, JALAN GADONG, BSB, BRUNEI DARUSSALAM
TEL: 673-2427275 FAX: 673-2427279
E-MAIL: sbc.brunei@gmail.com

CLIENT:

NO.	AMENDMENTS	BY	DATE

DESIGNED BY	THAN ZAW TUN	
DRAWN BY	SAI	
CHECKED BY	MD. YUNUS	
APPROVED BY		DATE 14/09/2022

SCALE: 1:30

TITLE: PAD FOOTING DETAILS - 2 [ALLOWABLE STRESS OF SOIL 200 kN/m²]

PROJECT: PROPOSED NEW 1 UNIT STANDARD DESIGN OF FARM LABOUR QUARTERS, BRUNEI DARUSSALAM (FOR 5 PERSONS) -OPTION 1

JOB NO:

SHEET NO:

DRAWING NO: SBC/Q366/AFLQ/5P/ST/CS - 103B

REV:

St: 2 (+4.00m)	A-1	A-2	A-3	A-4	A-5	A-6
	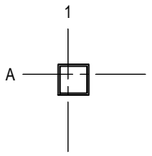 2C1 [SHS 100x100x6]	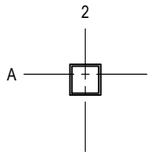 2C1 [SHS 100x100x6]	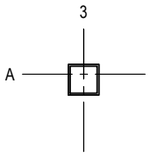 2C1 [SHS 100x100x6]	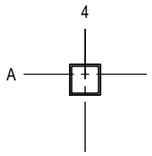 2C1 [SHS 100x100x6]	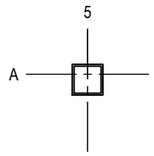 2C1 [SHS 100x100x6]	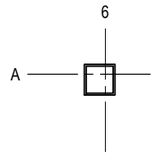 2C1 [SHS 100x100x6]
St: 1 (+1.00m)						
	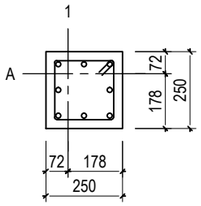 (250x250) 8T16 Link:T10-175	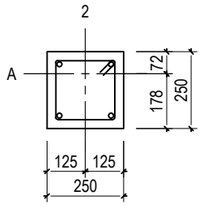 (250x250) 4T16 Link:T10-175	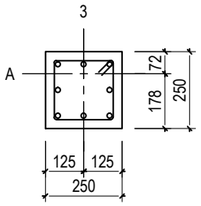 (250x250) 8T16 Link:T10-175	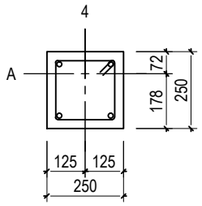 (250x250) 4T16 Link:T10-175	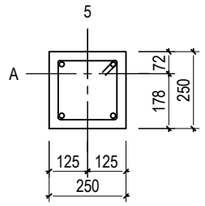 (250x250) 4T16 Link:T10-175	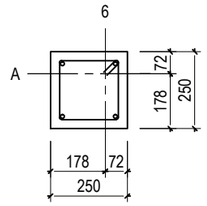 (250x250) 4T12 Link:T10-125
	1C1	1C2	1C3	1C4	1C5	1C6

St: 2 (+4.00m)	C-1	C-2	C-3	C-4	C-5	C-6
	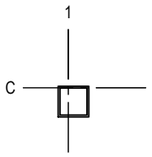 2C1 [SHS 100x100x6]	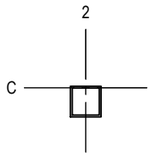 2C1 [SHS 100x100x6]	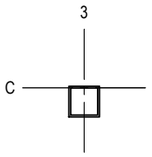 2C1 [SHS 100x100x6]	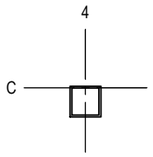 2C1 [SHS 100x100x6]	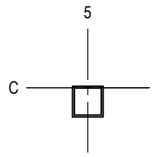 2C1 [SHS 100x100x6]	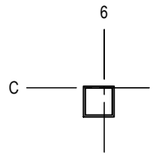 2C1 [SHS 100x100x6]
St: 1 (+1.00m)						
	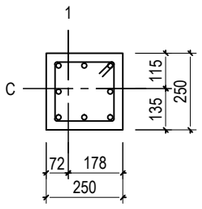 (250x250) 8T16 Link:T10-175	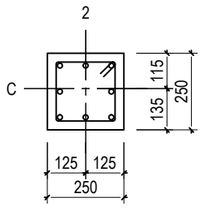 (250x250) 8T16 Link:T10-175	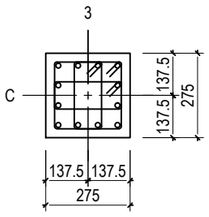 (275x275) 12T16 Link:T10-175+T10-175+T10-175	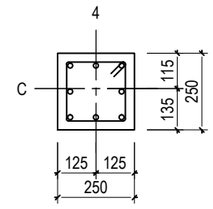 (250x250) 8T16 Link:T10-175	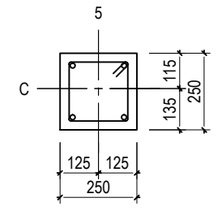 (250x250) 4T16 Link:T10-175	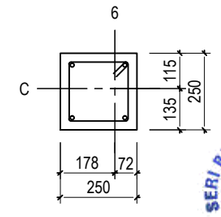 (250x250) 4T12 Link:T10-125
	1C7	1C8	1C9	1C10	1C11	1C12

SERI BUMI CONSULTANT
Unit 14, 2nd Flr, Blk. A, Gadong Central, Spg. 21, Gadong
BRUNEI

(sbc)
SERI BUMI CONSULTANT
CIVIL & STRUCTURAL ENGINEERING CONSULTANT
No: 14, 2nd FLOOR, BLOCK A, GADONG CENTRAL, SIMPANG 21, JALAN GADONG, BSB, BRUNEI DARUSSALAM
TEL: 673-2427275 FAX: 673-2427279
E-MAIL: sbc.brunei@gmail.com

CLIENT:

NO.	AMENDMENTS	BY	DATE

DESIGNED BY	THAN ZAW TUN
DRAWN BY	SAI
CHECKED BY	MD. YUNUS
APPROVED BY	
DATE	14/09/2022

SCALE: N.T.S

TITLE: COLUMN SCHEDULE

PROJECT: PROPOSED NEW 1 UNIT STANDARD DESIGN OF FARM LABOUR QUARTERS, BRUNEI DARUSSALAM (FOR 5 PERSONS) -OPTION 1

JOB NO:

SHEET NO:

DRAWING NO: SBC/Q366/AFLQ/5P/ST/CS - 104

REV:

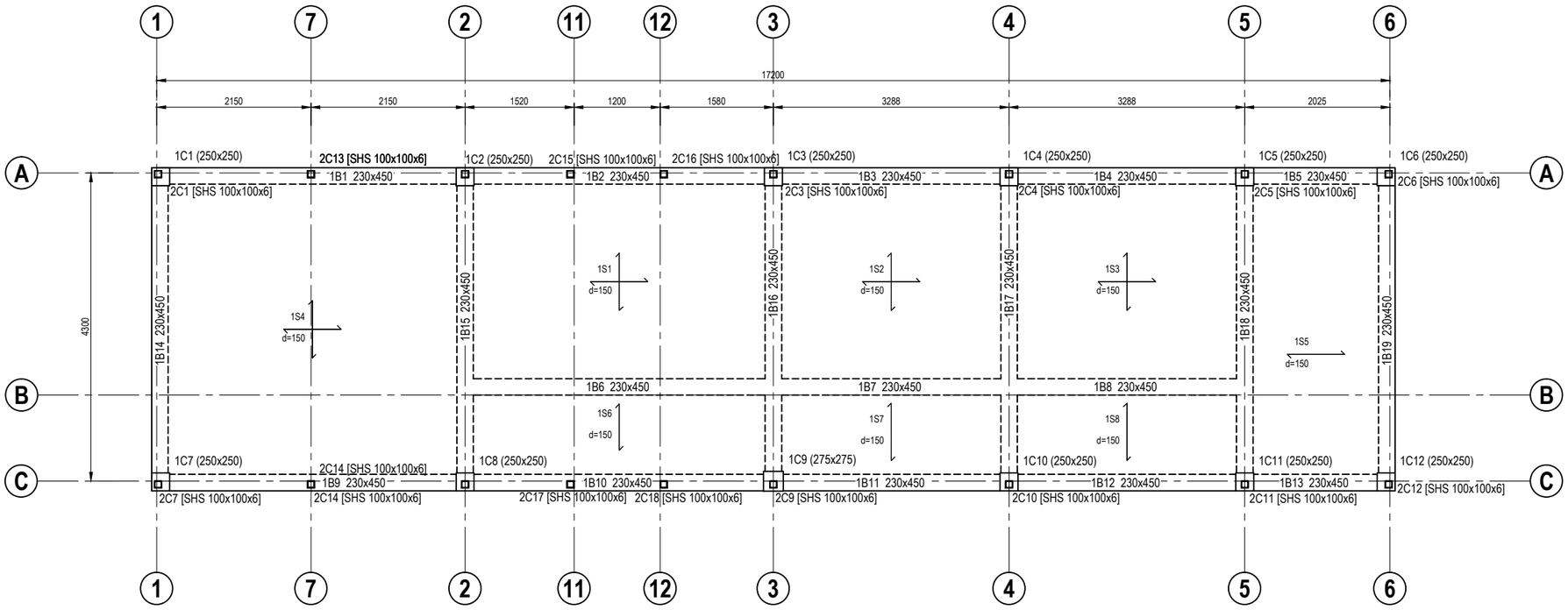

GROUND FLOOR BEAM LAYOUT PLAN

SCALE 1 : 75

SERI BUMI CONSULTANT
Unit 14,
2nd Flr, Blk. A,
Gadong Central,
Spg. 21, Gadong
BRUNEI

(sbc)
SERI BUMI CONSULTANT
CIVIL & STRUCTURAL ENGINEERING CONSULTANT
No: 14, 2nd FLOOR, BLOCK A, GADONG CENTRAL, SIMPANG 21, JALAN GADONG, BSB, BRUNEI DARUSSALAM
TEL: 673-2427275 FAX: 673-2427279
E-MAIL: sbc.brunei@gmail.com

CLIENT:

NO.	AMENDMENTS	BY	DATE

DESIGNED BY	THAN ZAW TUN	
DRAWN BY	SAI	
CHECKED BY	MD. YUNUS	
APPROVED BY		DATE 14/09/2022

SCALE: 1:75

TITLE: GROUND FLOOR BEAM LAYOUT PLAN

PROJECT: PROPOSED NEW 1 UNIT STANDARD DESIGN OF FARM LABOUR QUARTERS, BRUNEI DARUSSALAM (FOR 5 PERSONS) -OPTION 1

JOB NO:

SHEET NO:

DRAWING NO: SBC/Q366/AFLQ/5P/ST/CS - 200

REV:

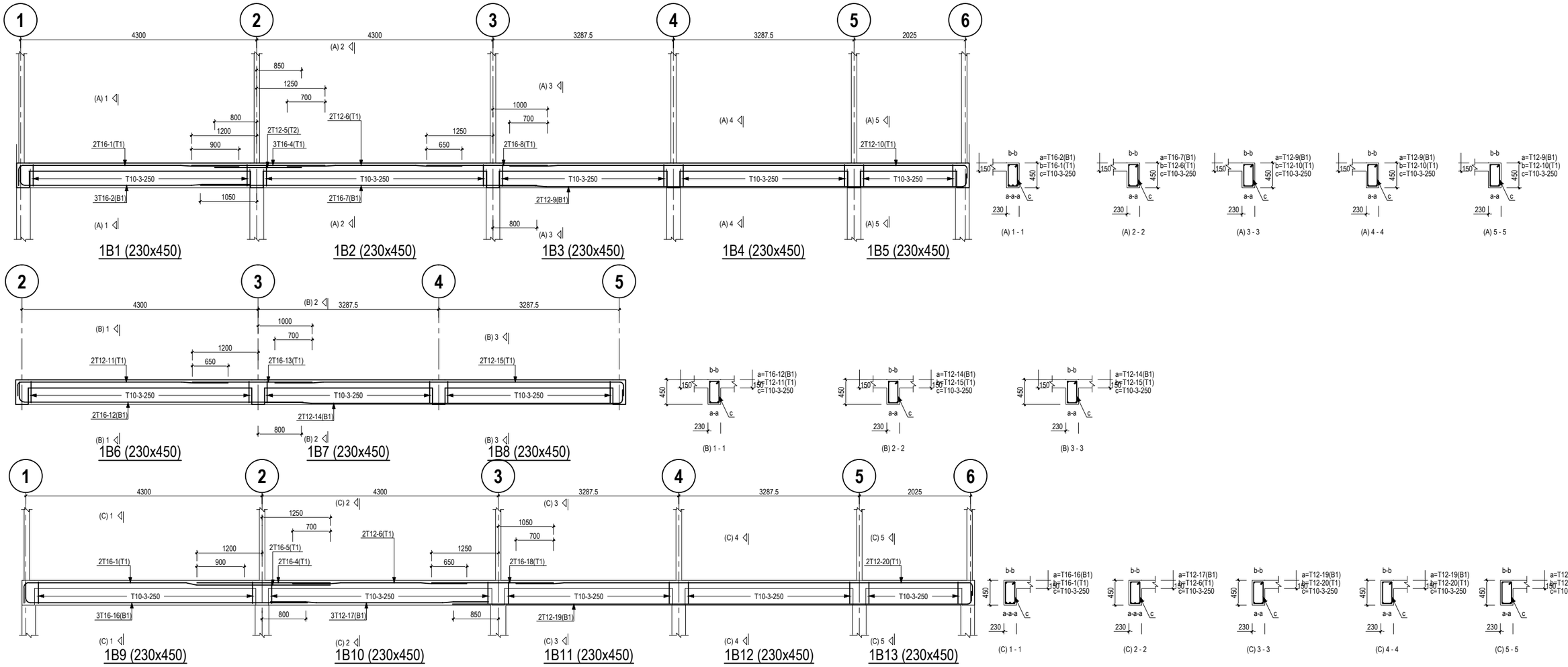

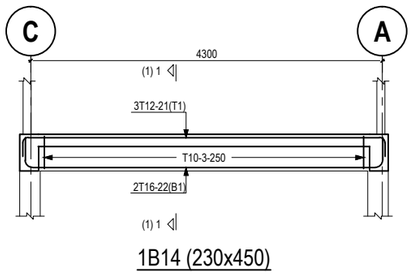

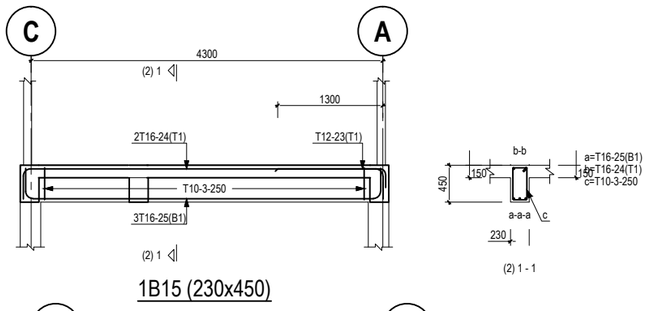

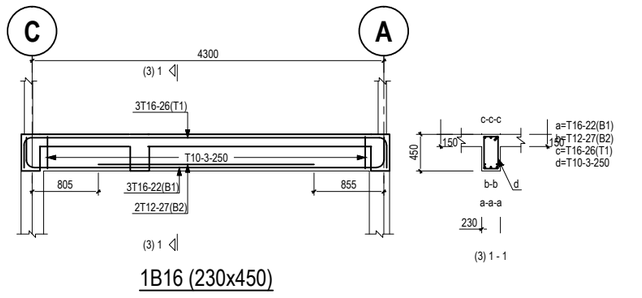

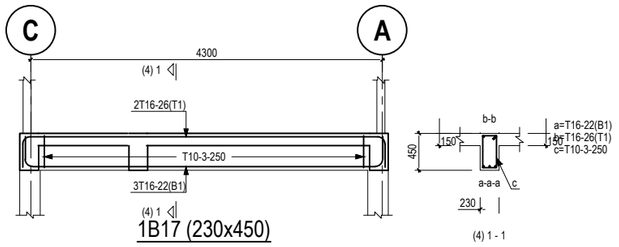

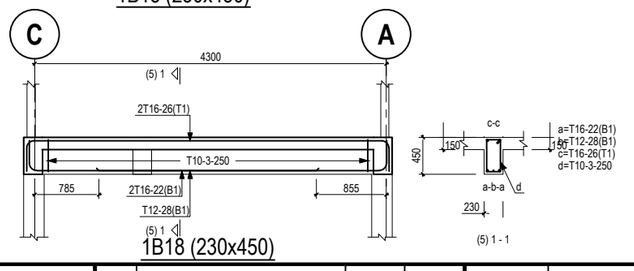

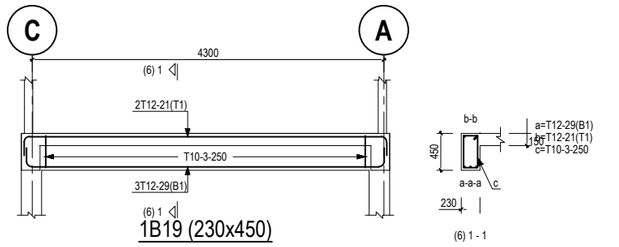

SERI BUMI CONSULTANT
Unit 14, 2nd Flr, Blk. A, Gadong Central, Spg. 21, Gadong
BRUNEI

SERI BUMI CONSULTANT CIVIL & STRUCTURAL ENGINEERING CONSULTANT No: 14, 2nd FLOOR, BLOCK A, GADONG CENTRAL, SIMPANG 21, JALAN GADONG, BSB, BRUNEI DARUSSALAM TEL: 673-2427275 FAX: 673-2427279 E-MAIL: sbc.brunei@gmail.com	CLIENT:	NO. / AMENDMENTS / BY / DATE	DESIGNED BY: THAN ZAW TUN DRAWN BY: SAI CHECKED BY: MD. YUNUS APPROVED BY:	DATE: 14/09/2022	SCALE: 1:75	TITLE: GROUND FLOOR BEAM DETAILS PROJECT: PROPOSED NEW 1 UNIT STANDARD DESIGN OF FARM LABOUR QUARTERS, BRUNEI DARUSSALAM (FOR 5 PERSONS) -OPTION 1	JOB NO: SHEET NO: DRAWING NO: SBC/Q366/AFLQ/5P/ST/CS - 201 REV:

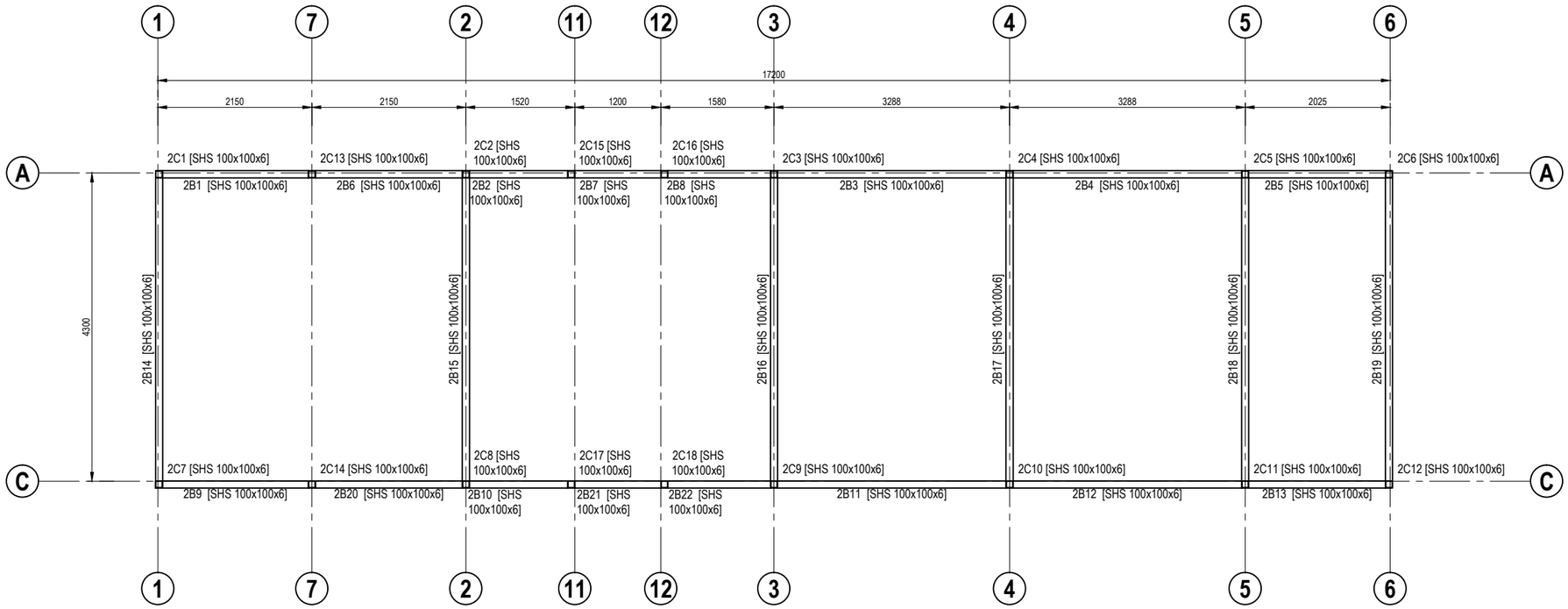

ROOF BEAM LAYOUT PLAN

SCALE 1 : 75

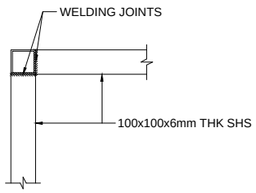

PLAN

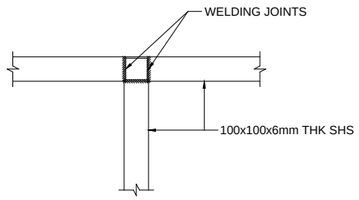

PLAN

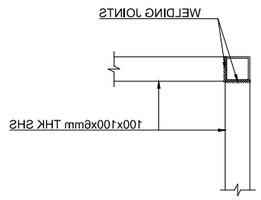

PLAN

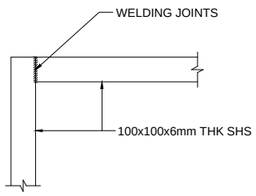

SECTION

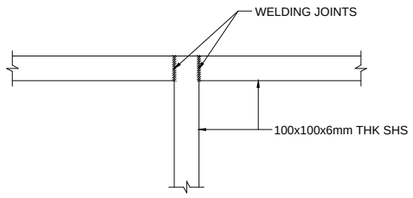

SECTION

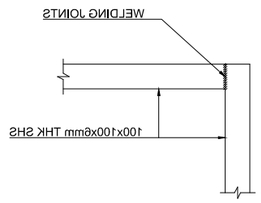

SECTION

SERI BUMI CONSULTANT
Unit 14,
2nd Flr, Blk. A,
Gadong Central,
Spg. 21, Gadong
BRUNEI

(sbc)
SERI BUMI CONSULTANT
CIVIL & STRUCTURAL ENGINEERING CONSULTANT
No: 14, 2nd FLOOR, BLOCK A, GADONG CENTRAL, SIMPANG 21, JALAN GADONG, BSB, BRUNEI DARUSSALAM
TEL: 673-2427275 FAX: 673-2427279
E-MAIL: sbc.brunei@gmail.com

CLIENT:

NO.	AMENDMENTS	BY	DATE

DESIGNED BY	THAN ZAW TUN	
DRAWN BY	SAI	
CHECKED BY	MD. YUNUS	
APPROVED BY		DATE 14/09/2022

SCALE: 1:75

TITLE: ROOF BEAM LAYOUT PLAN

PROJECT: PROPOSED NEW 1 UNIT STANDARD DESIGN OF FARM LABOUR QUARTERS, BRUNEI DARUSSALAM (FOR 5 PERSONS) -OPTION 1

JOB NO:

SHEET NO:

DRAWING NO: SBC/Q366/AFLQ/5P/ST/CS - 300

REV:

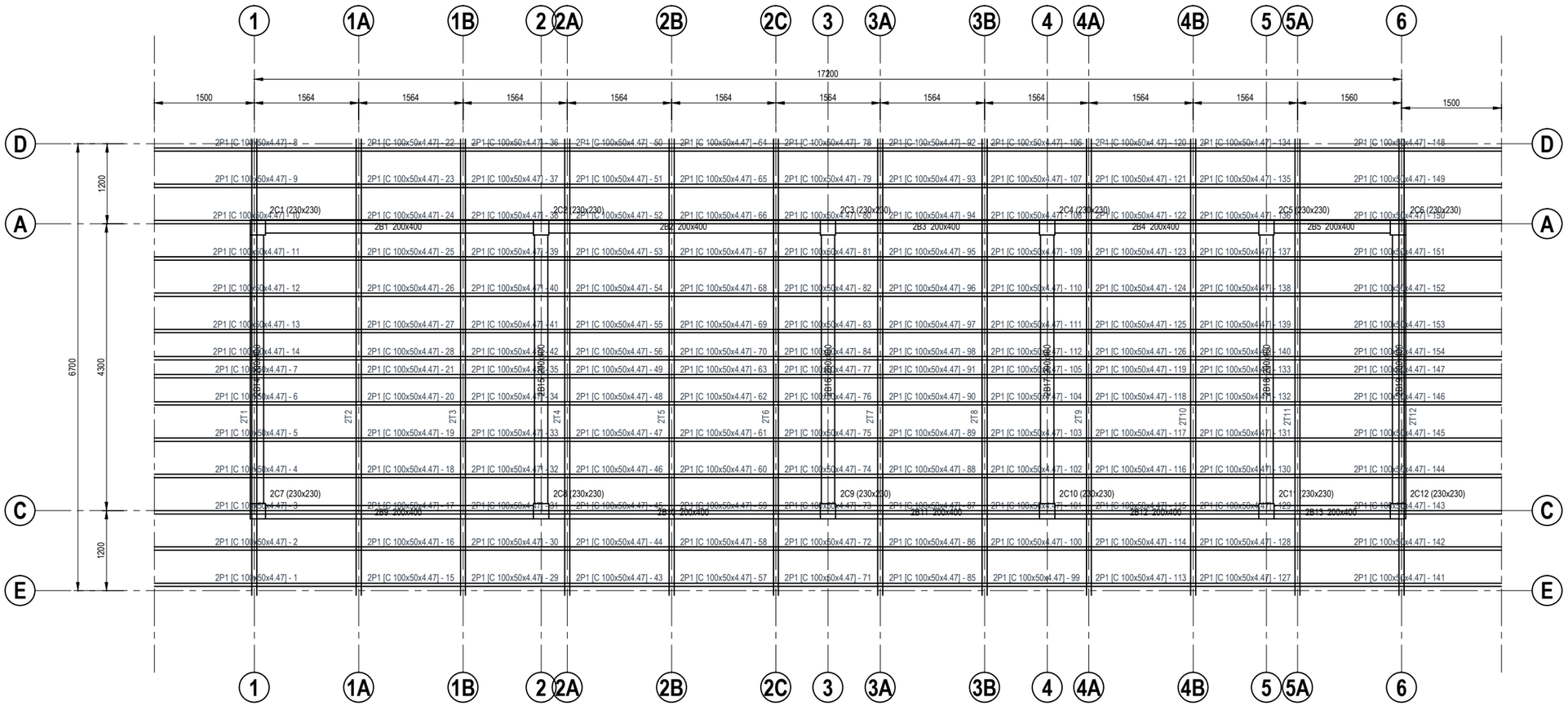

ROOF TRUSSES LAYOUT PLAN

SCALE 1 : 75

SERI BUMI CONSULTANT
Unit 14,
2nd Flr, Blk. A,
Gadong Central,
Spg. 21, Gadong
BRUNEI

(sbc)
SERI BUMI CONSULTANT
CIVIL & STRUCTURAL ENGINEERING CONSULTANT
No: 14, 2nd FLOOR, BLOCK A, GADONG CENTRAL, SIMPANG 21, JALAN GADONG, BSB, BRUNEI DARUSSALAM
TEL: 673-2427275 FAX: 673-2427279
E-MAIL: sbc.brunei@gmail.com

CLIENT:

NO.	AMENDMENTS	BY	DATE

DESIGNED BY	THAN ZAW TUN	
DRAWN BY	SAI	
CHECKED BY	MD. YUNUS	
APPROVED BY		DATE 17/09/2022

SCALE: 1:75

TITLE: ROOF TRUSSES LAYOUT PLAN

PROJECT: PROPOSED NEW 1 UNIT STANDARD DESIGN OF FARM LABOUR QUARTERS, BRUNEI DARUSSALAM (FOR 5 PERSONS) -OPTION 1

JOB NO:

SHEET NO:

DRAWING NO: SBC/Q366/AFLQ/5P/ST/CS - 400

REV:

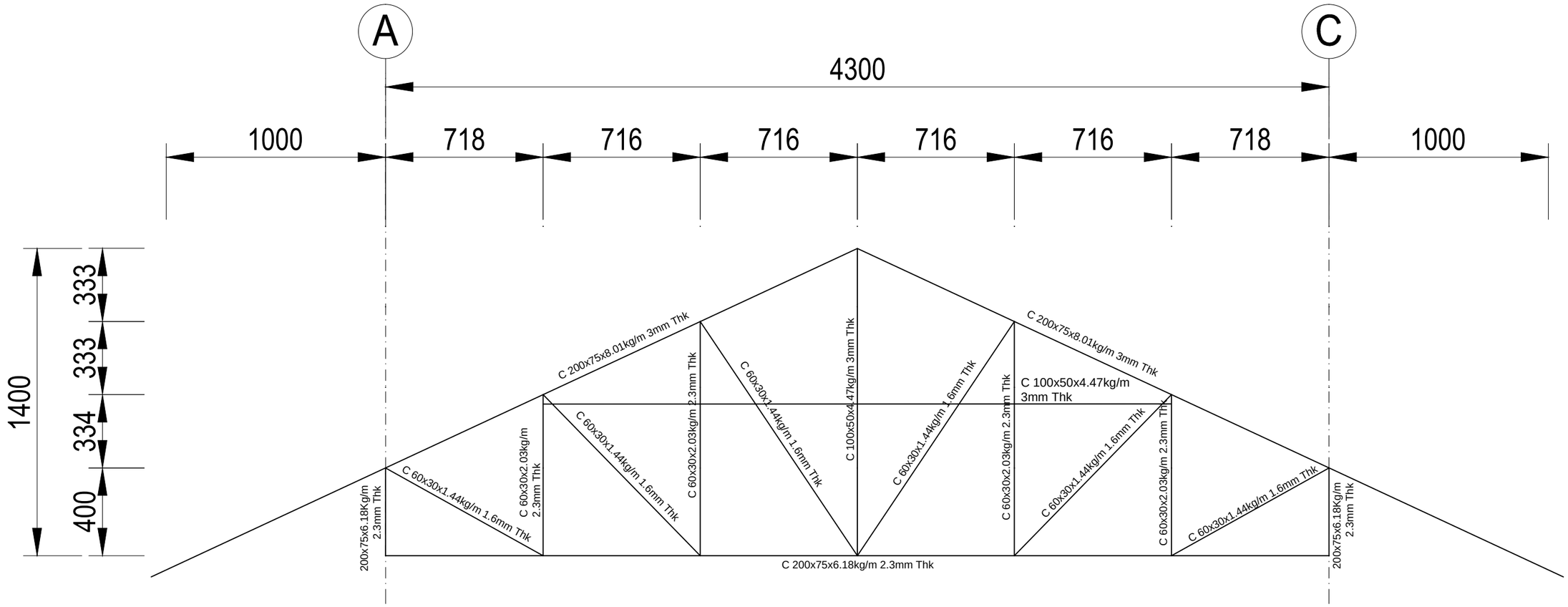

ROOF TRUSS SECTION (FOR ROOF TRUSS TO STEEL BEAM CONNECTION)

SERI BUMI CONSULTANT
Unit 14, 2nd Flr, Blk. A, Gadong Central, Spg. 21, Gadong
BRUNEI

(sbc)
SERI BUMI CONSULTANT
CIVIL & STRUCTURAL ENGINEERING CONSULTANT
No: 14, 2nd FLOOR, BLOCK A, GADONG CENTRAL, SIMPANG 21, JALAN GADONG, BSB, BRUNEI DARUSSALAM
TEL: 673-2427275 FAX: 673-2427279
E-MAIL: sbc.brunei@gmail.com

CLIENT:

NO.	AMENDMENTS	BY	DATE

DESIGNED BY	THAN ZAW TUN	
DRAWN BY	SAI	
CHECKED BY	MD. YUNUS	
APPROVED BY		DATE 20/09/2022

SCALE: 1:20

TITLE: ROOF TRUSSES SECTION

PROJECT: PROPOSED NEW 1 UNIT STANDARD DESIGN OF FARM LABOUR QUARTERS, BRUNEI DARUSSALAM (FOR 5 PERSONS)

JOB NO:

SHEET NO:

DRAWING NO: SBC/Q366/AFLQ/5P/ST/CS - 401

REV:

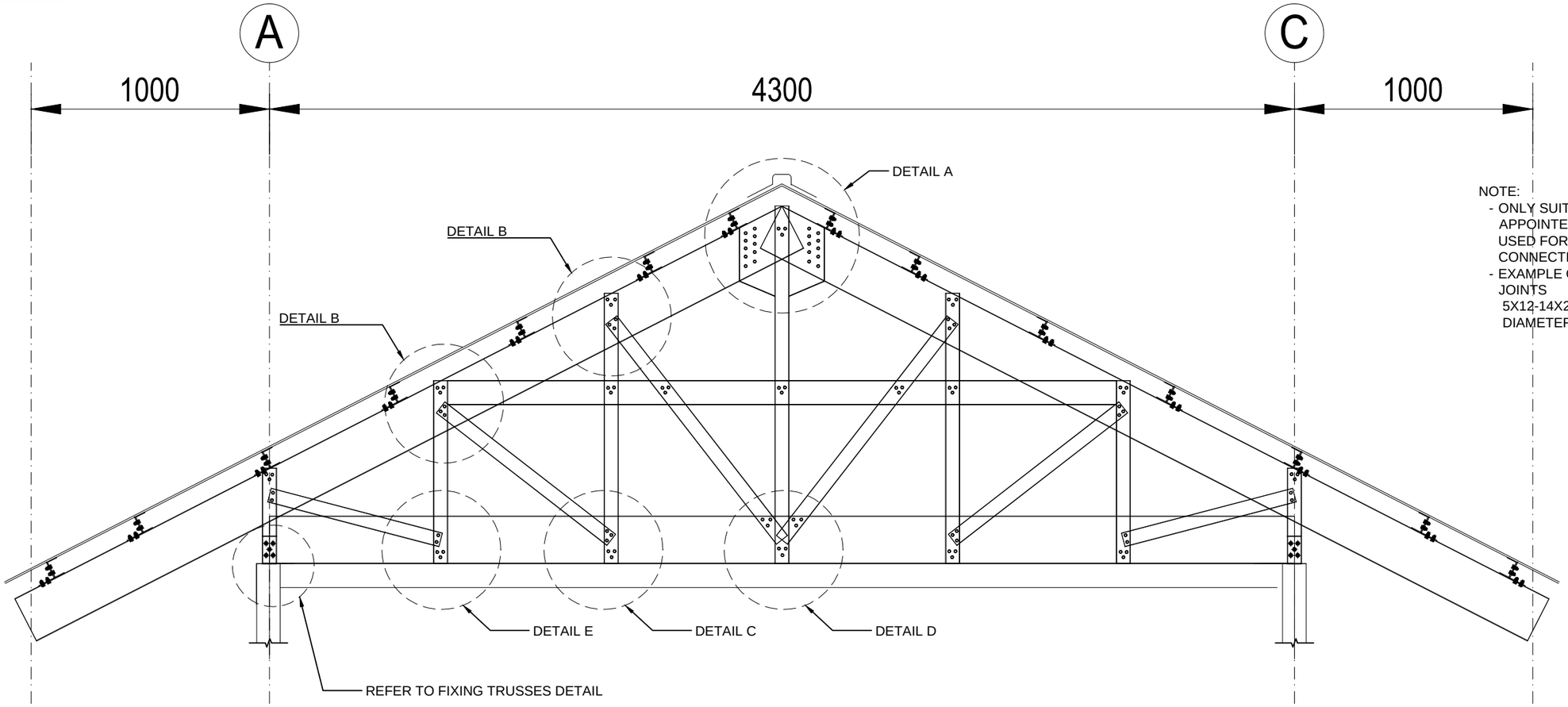

ROOF TRUSS SECTION (FOR ROOF TRUSS TO STEEL BEAM CONNECTION)

NOTE:
- ONLY SUITABLE AND APPROVED SCREWS BY APPOINTED SUPERVISION CONSULTANT TO BE USED FOR ROOF TRUSSES MEMBERS CONNECTION.
- EXAMPLE OF SCREW LABELLING FOR VARIOUS JOINTS
  5X12-14X20 MEANS 5 NOS OF 12 TO 14MM DIAMETER OF 20MM LENGTH SCREW TYPE.

JTS

SERI BUMI CONSULTANT
Unit 14, 2nd Flr, Blk. A, Gadong Central, Spg. 21, Gadong
BRUNEI

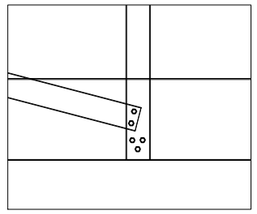

DETAIL E
5 x 12-14 x 20
SCREW

C-PURLIN

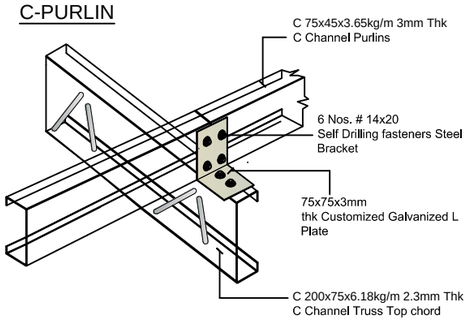

TYPICAL BRACKET 3mm (FOR HEEL FIXINGS)

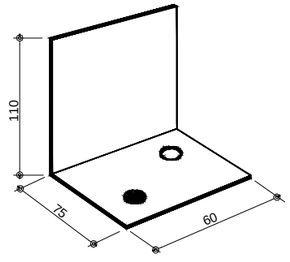

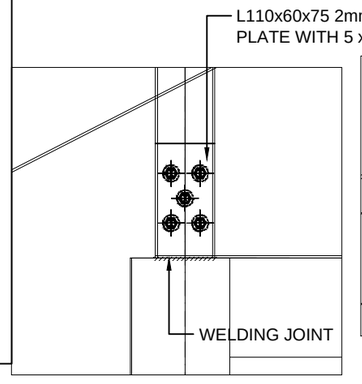

FIXING TRUSSES
(HEEL JOINT)

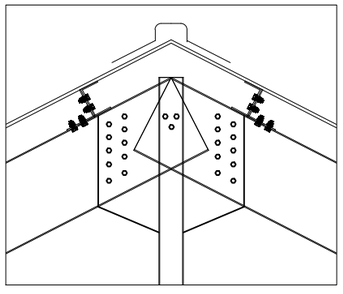

DETAIL A
23 x 12-14 x 20
SCREW

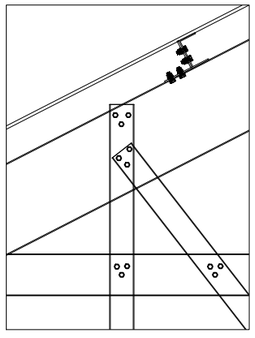

DETAIL B
6 x 12-14 x 20
SCREW

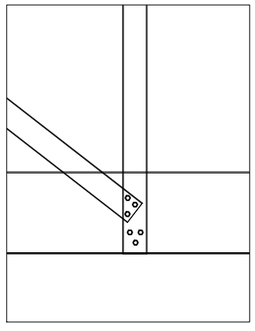

DETAIL C
6 x 12-14 x 20
SCREW

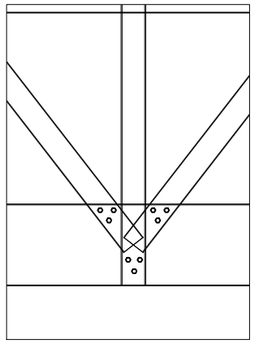

DETAIL D
9 x 12-14 x 20
SCREW

(sbc)
SERI BUMI CONSULTANT
CIVIL & STRUCTURAL ENGINEERING CONSULTANT
No: 14, 2nd FLOOR, BLOCK A, GADONG CENTRAL, SIMPANG 21, JALAN GADONG, BSB, BRUNEI DARUSSALAM
TEL: 673-2427275 FAX: 673-2427279
E-MAIL: sbc.brunei@gmail.com

CLIENT:

NO.	AMENDMENTS	BY	DATE

DESIGNED BY	THAN ZAW TUN	
DRAWN BY	SAI	
CHECKED BY	MD. YUNUS	
APPROVED BY		DATE 20/09/2022

SCALE: 1:20

TITLE: ROOF TRUSSES AND PURLIN CONNECTIONS DETAILS

PROJECT: PROPOSED NEW 1 UNIT STANDARD DESIGN OF FARM LABOUR QUARTERS, BRUNEI DARUSSALAM (FOR 5 PERSONS)

JOB NO:

SHEET NO:

DRAWING NO: SBC/Q366/AFLQ/5P/ST/CS - 402

REV:

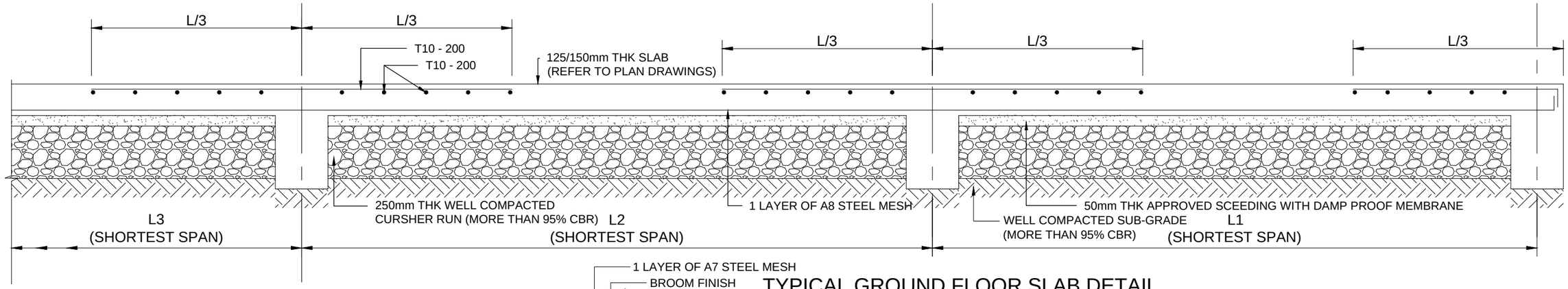

TYPICAL GROUND FLOOR SLAB DETAIL

SCALE 1 : 20

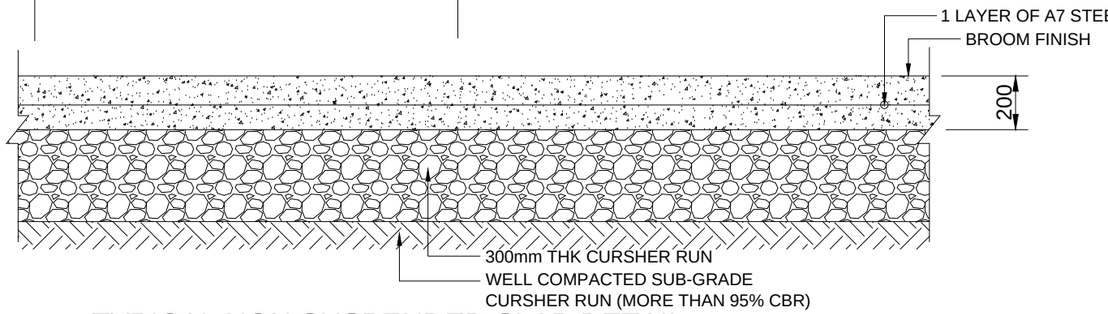

TYPICAL NON SUSPENDED SLAB DETAIL

SCALE 1 : 20

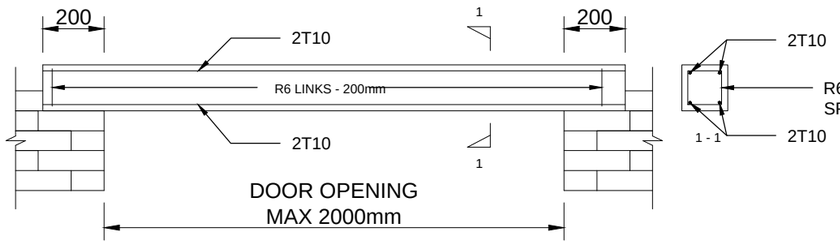

TYPICAL LINTEL BEAM DETAIL

SCALE 1 : 20

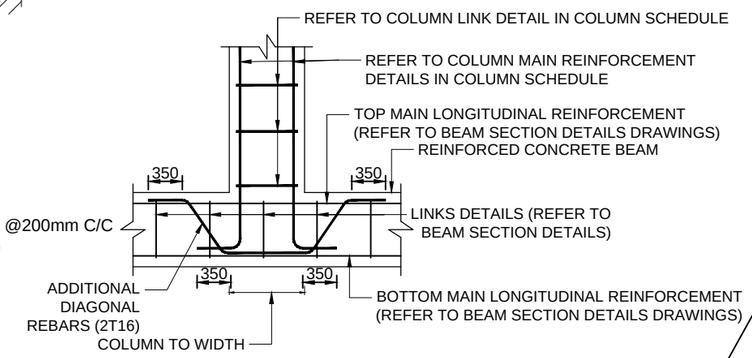

TYPICAL FLOATING COLUMN DETAIL

SCALE 1 : 20

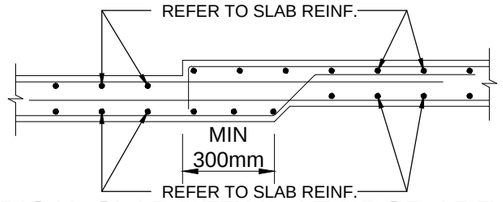

TYPICAL SLAB DETAIL AT DROP AREA

SCALE 1 : 20

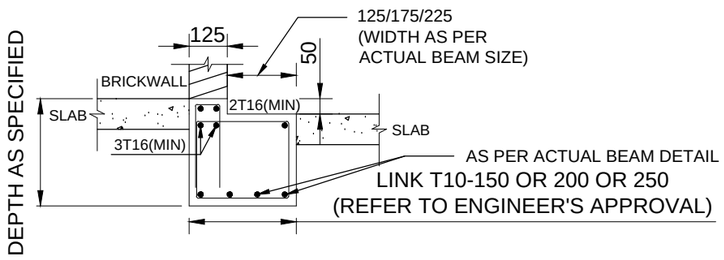

APPROXIMATE & TYPICAL BEAM DETAIL FOR 50mm OR 100mm DROP WHICH NEEDS TO BE ALIGNED/COORDINATED WITH ARCHITECT'S DRAWINGS.

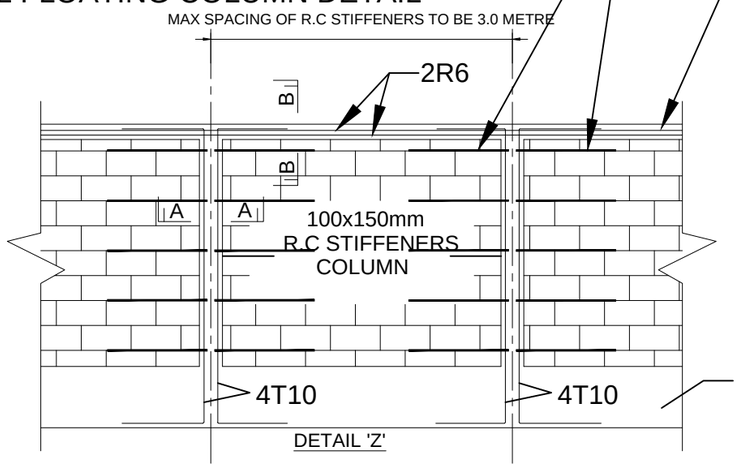

600mm LENGTH R6
DOWEL BARS AT EVERY 4 LAYERS
OF BRICKS SPACING

TOP CAPPING BEAM OF
BRICKWALL (100x100mm)
TO SUPPORT TOP ROOF
TRUSSES (TOP CHORD) &
BRICKWALL

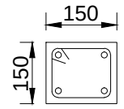

A-A

150x150mm
MAIN BAR: 4T10
LINKS: R6-150C/C
REINFORCED CONCRETE STIFFENERS

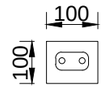

B-B

100x100mm
MAIN BAR: 2R6 (TOP)
LINKS: R6-200C/C
TOP R.C CAPPING BEAMS

MAIN ROOF BEAM
AS PER DETAIL

TYPICAL REINFORCED CONCRETE STIFFENER COLUMNS & CAPPING BEAMS DETAILS

SERI BUMI CONSULTANT
Unit 14, 2nd Flr, Blk. A, Gadong Central, Spg. 21, Gadong
BRUNEI

(sbc)
SERI BUMI CONSULTANT
CIVIL & STRUCTURAL ENGINEERING CONSULTANT
No: 14, 2nd FLOOR, BLOCK A, GADONG CENTRAL, SIMPANG 21, JALAN GADONG, BSB, BRUNEI DARUSSALAM
TEL: 673-2427275 FAX: 673-2427279
E-MAIL: sbc.brunei@gmail.com

CLIENT:

NO.	AMENDMENTS	BY	DATE

DESIGNED BY	THAN ZAW TUN	
DRAWN BY	SAI	
CHECKED BY	MD. YUNUS	
APPROVED BY		DATE 14/09/2022

SCALE: 1:20

TITLE: MISCELLANEOUS DETAILS 1

PROJECT: PROPOSED NEW 1 UNIT STANDARD DESIGN OF FARM LABOUR QUARTERS, BRUNEI DARUSSALAM (FOR 5 PERSONS) -OPTION 1

JOB NO:

SHEET NO:

DRAWING NO: SBC/Q366/AFLQ/5P/ST/MISC-100

REV:

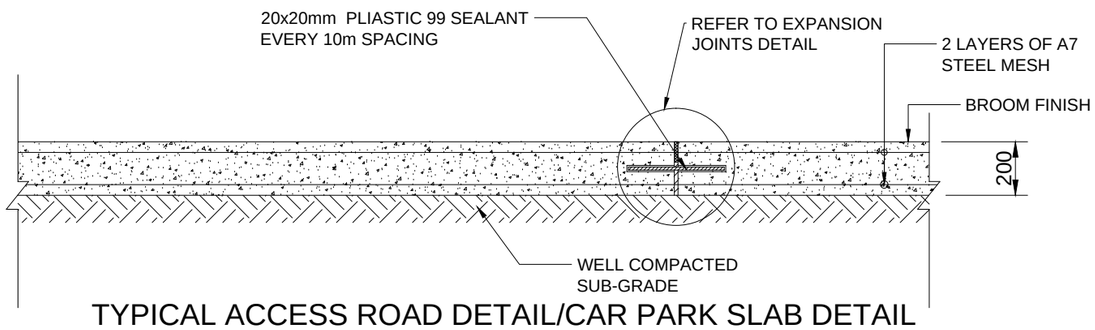

TYPICAL ACCESS ROAD DETAIL/CAR PARK SLAB DETAIL

SCALE 1 : 20

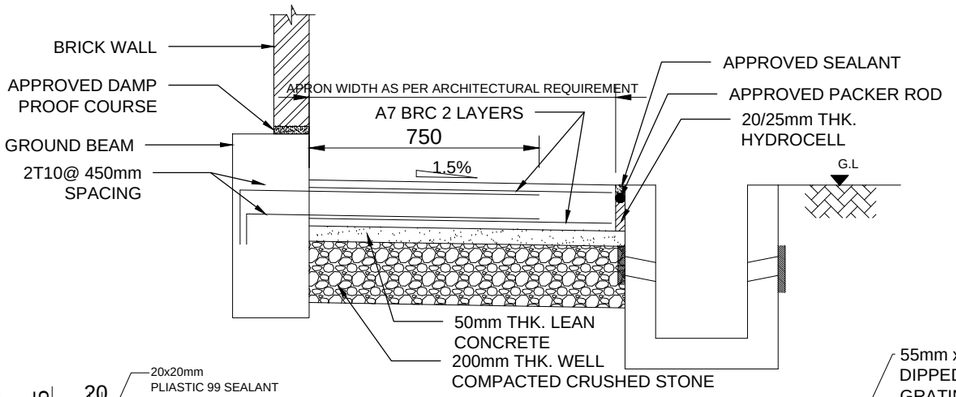

TYPICAL APRON SLAB DETAIL

SCALE 1 : 20

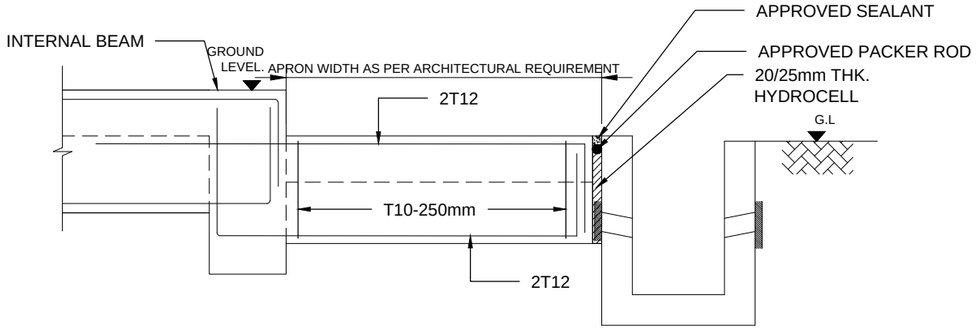

TYPICAL APRON BEAM DETAIL(200x450)

SCALE 1 : 20

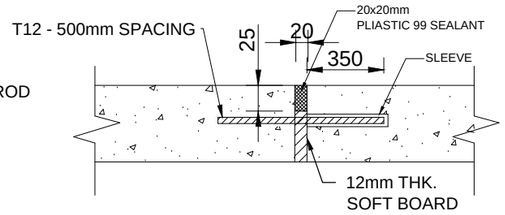

EXPANSION JOINTS DETAIL

SCALE 1 : 20

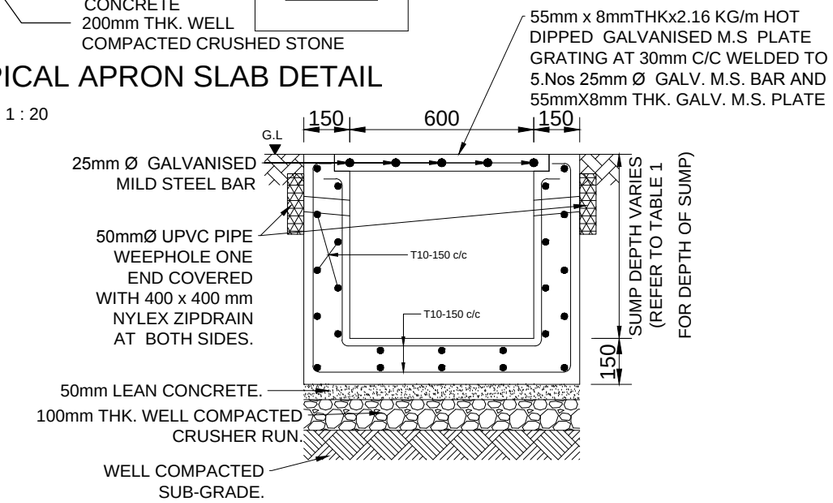

TYPICAL SECTION 'Z-Z'
600x600mm R.C SUMP DETAIL

SCALE 1 : 20

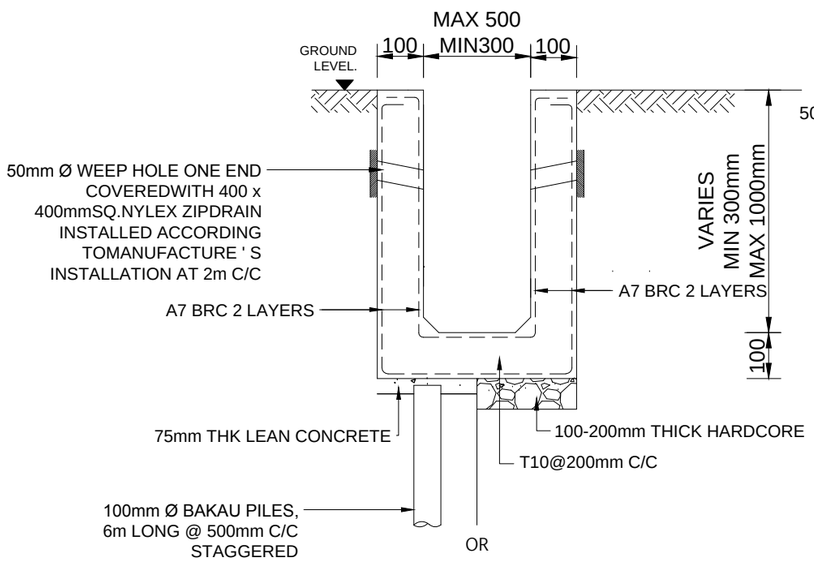

R.C DRAIN DETAIL

SCALE 1 : 20

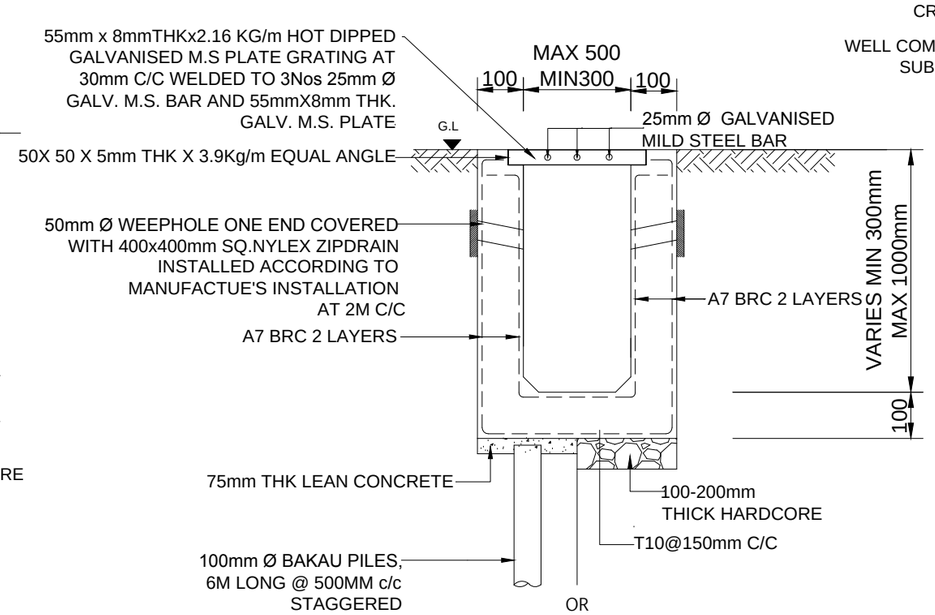

R.C DRAIN WITH GRATING DETAIL

SCALE 1 : 20

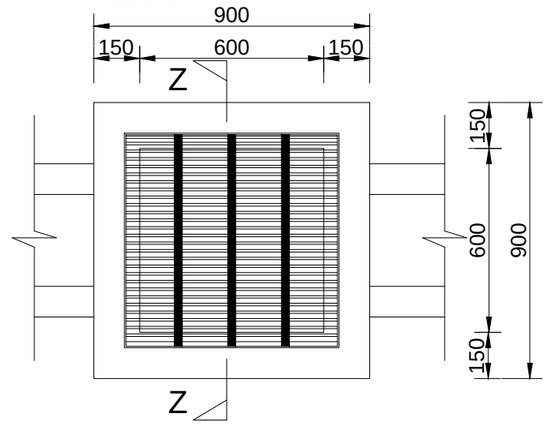

R.C SUMP PLAN LAYOUT

SCALE 1 : 20

SERI BUMI CONSULTANT
Unit 14,
2nd Flr, Blk. A,
Gadong Central,
Spg. 21, Gadong
BRUNEI

(sbc)
SERI BUMI CONSULTANT
CIVIL & STRUCTURAL ENGINEERING CONSULTANT
No: 14, 2nd FLOOR, BLOCK A, GADONG CENTRAL, SIMPANG 21, JALAN GADONG, BSB, BRUNEI DARUSSALAM
TEL: 673-2427275 FAX: 673-2427279
E-MAIL: sbc.brunei@gmail.com

CLIENT:

NO.	AMENDMENTS	BY	DATE

DESIGNED BY	THAN ZAW TUN	
DRAWN BY	SAI	
CHECKED BY	MD. YUNUS	
APPROVED BY		DATE 14/09/2022

SCALE: 1:20

TITLE: MISCELLANEOUS DETAILS 2

PROJECT: PROPOSED NEW 1 UNIT STANDARD DESIGN OF FARM LABOUR QUARTERS, BRUNEI DARUSSALAM (FOR 5 PERSONS) -OPTION 1

JOB NO:

SHEET NO:

DRAWING NO: SBC/Q366/AFLQ/5P/ST/MISC-101

REV:

PROPOSED NEW 1 UNIT STANDARD DESIGN OF FARM LABOUR QUARTERS, BRUNEI DARUSSALAM (FOR 5 PERSONS) - OPTION 1

DRAWING LIST

ITEM	DRAWING NUMBER	DRAWING TITLE
1	JOMC/254/FH/100	SITE DEVELOPMENT PLAN FIRE HYDRANT LAYOUT PLAN - (FOR 5 PERSONS OPTION 1)
2	JOMC/254/AC/200	GROUND FLOOR AIR CONDITIONING LAYOUT - (FOR 5 PERSONS OPTION 1)
3	JOMC/254/L/200	GROUND FLOOR LIGHTING LAYOUT - (FOR 5 PERSONS OPTION 1)
4	JOMC/254/P/200	GROUND FLOOR POWER LAYOUT - (FOR 5 PERSONS OPTION 1)
5	JOMC/254/P/300	SOLAR SYSTEM LAYOUT DIAGRAM - (FOR 5 PERSONS OPTION 1)
6	JOMC/254/F/200	GROUND FLOOR FIRE PROTECTION LAYOUT - (FOR 5 PERSONS OPTION 1)
7	JOMC/254/T/200	GROUND FLOOR TELEPHONE LAYOUT - (FOR 5 PERSONS OPTION 1)
8	JOMC/254/T/300	TELEPHONE SYSTEM SCHEMATIC DIAGRAM - (FOR 5 PERSONS OPTION 1)
9	JOMC/254/W/200	GROUND FLOOR PLUMBING LAYOUT - (FOR 5 PERSONS OPTION 1)
10	JOMC/254/W/300	PLUMBING SCHEMATIC DIAGRAM - (FOR 5 PERSONS OPTION 1)
11	JOMC/254/SEW/200	GROUND FLOOR SANITARY LAYOUT - (FOR 5 PERSONS OPTION 1)
12	JOMC/254/SEW/300	SANITARY SCHEMATIC DIAGRAM - (FOR 5 PERSONS OPTION 1)
13	JOMC/254/SEW/301	SANITARY SEWER LINE INVERT LEVEL - (FOR 5 PERSONS OPTION 1)

Copyright ©
"This document is and shall remain the property of JOMC. The document may only be used for the purpose for which it was commisioned and in accordance with the terms of engagement for the commision. Unauthorised use of the document in any way is prohibited."

GENERAL NOTES

REV	DESCRIPTION	DATE	BY

CLIENT
DEPARTMENT OF AGRICULTURE AND AGRIFOOD, BRUNEI DARUSSALAM

ARCHITECT
KHA arkitek
KHA Arkitek
P.O Box 2/2
MPC,
Old Airport,
Berakas
BB3122
Contact No: 2610380

ENGINEER
Jurutera OMC
Chartered Engineers
Engineering Consultant, Design, Management & Services
2nd Floor, Unit 17 & 18, Block C, Melabau Complex,
Jalan Serusop, BB2313, B. S. B. Brunei Darussalam
Tel : 673-2342688 Fax : 673-2342483
Email : juruteraomc@yahoo.com
JURUTERA OMC Engineering Consultant, Design, Management Services
CHIN LEE TUCK
REGISTRATION NO: BAPEGSPE20220007-E

PROJECT TITLE
PROPOSED NEW 1 UNIT STANDARD DESIGN OF FARM LABOUR QUARTERS, BRUNEI DARUSSALAM (FOR 5 PERSONS) - OPTION 1

DRAWING TITLE
DRAWING LIST - SHEET 1 OF 1
- (FOR 5 PERSONS OPTION 1)

DRAWN BY:	FS	DESIGN BY:	FS	SCALE:	NTS
CHECKED BY:	CLT	DATE:	SEPT 2022	JOB NO:	254
DRAWING NO:	JOMC/254/M&E/000				

13 September, 2022 - 3:12 PM \\JOMCDATABANK\SharedFolder\JOMC Projects\254 - Design Services for Agricultural Farm Labour Quarters (M&E)\1.Drawings\2. Workshop drawings\220906\REV1\ JOMC-254-5 PERSONS OPT1-M&E.dwg

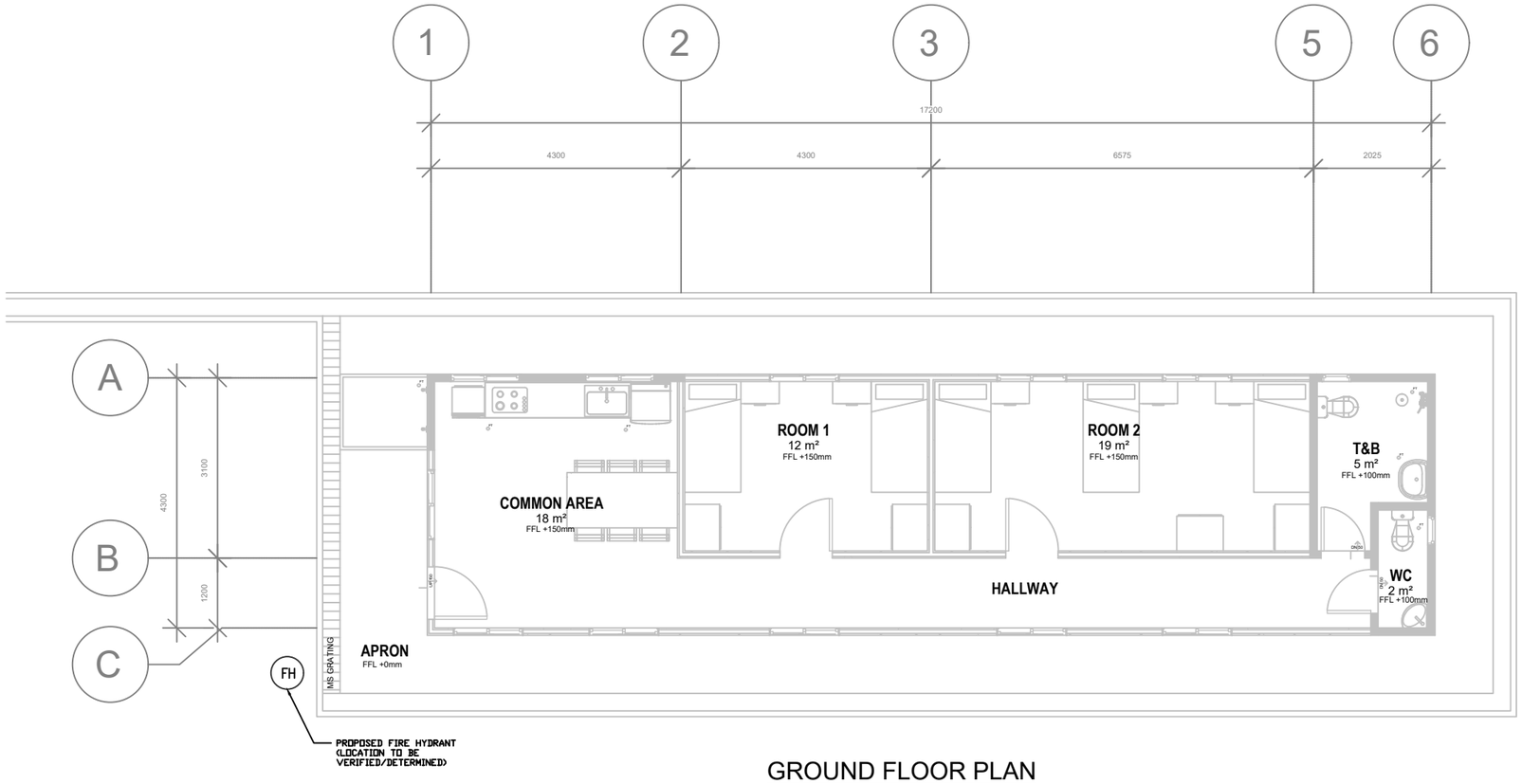

GROUND FLOOR PLAN

Copyright.©
"This document is and shall remain the property of JOMC. The document may only be used for the purpose for which it was commisioned and in accordance with the terms of engagement for the commision. Unauthorised use of the document in any way is prohibited."

GENERAL NOTES

REV	DESCRIPTION	DATE	BY

CLIENT

DEPARTMENT OF AGRICULTURE AND AGRIFOOD, BRUNEI DARUSSALAM

ARCHITECT

KHA arkitek
KHA Arkitek
P.O Box 2/2
MPC,
Old Airport,
Berakas
BB3122
Contact No: 2610380

ENGINEER

Jurutera OMC
Chartered Engineers
Engineering Consultant, Design, Management & Services
2nd Floor, Unit 17 & 18, Block C, Melabau Complex,
Jalan Serusop, BB2313, B. S. B. Brunei Darussalam
Tel : 673-2342688 Fax : 673-2342483
Email : juruteraomc@yahoo.com
JURUTERA OMC Engineering Consultant, Design Management Services
CHIN LEE TUCK
REGISTRATION NO: BAPEQS/PE20220007-E

PROJECT TITLE

PROPOSED NEW 1 UNIT STANDARD DESIGN OF FARM LABOUR QUARTERS, BRUNEI DARUSSALAM (FOR 5 PERSONS) - OPTION 1

DRAWING TITLE

SITE DEVELOPMENT PLAN FIRE HYDRANT LAYOUT PLAN - (FOR 5 PERSONS OPTION 1)

DRAWN BY:	FS	DESIGN BY:	FS	SCALE:	1:100
CHECKED BY:	CLT	DATE:	SEPT 2022	JOB NO:	254
DRAWING NO:	JOMC/254/FH/100				

12 September, 2022 - 3:42 PM \\JOMCDATABANK\SharedFolder\JOMC Projects\254 - Design Services for Agricultural Farm Labour Quarters (M&E)\1.Drawings\2.Workshop drawings\220906\REV1\JOMC-254-5 PERSONS OPT1-M&E.dwg

LEGEND	
	WALL TYPE FAN COIL UNIT C/W 1X15A S.S.O. (ENERGY EFFICIENT)
	4–WAY CASSETTE FCU C/W 1X15A S.S.O.
	AIR–COND CONDENSING UNIT

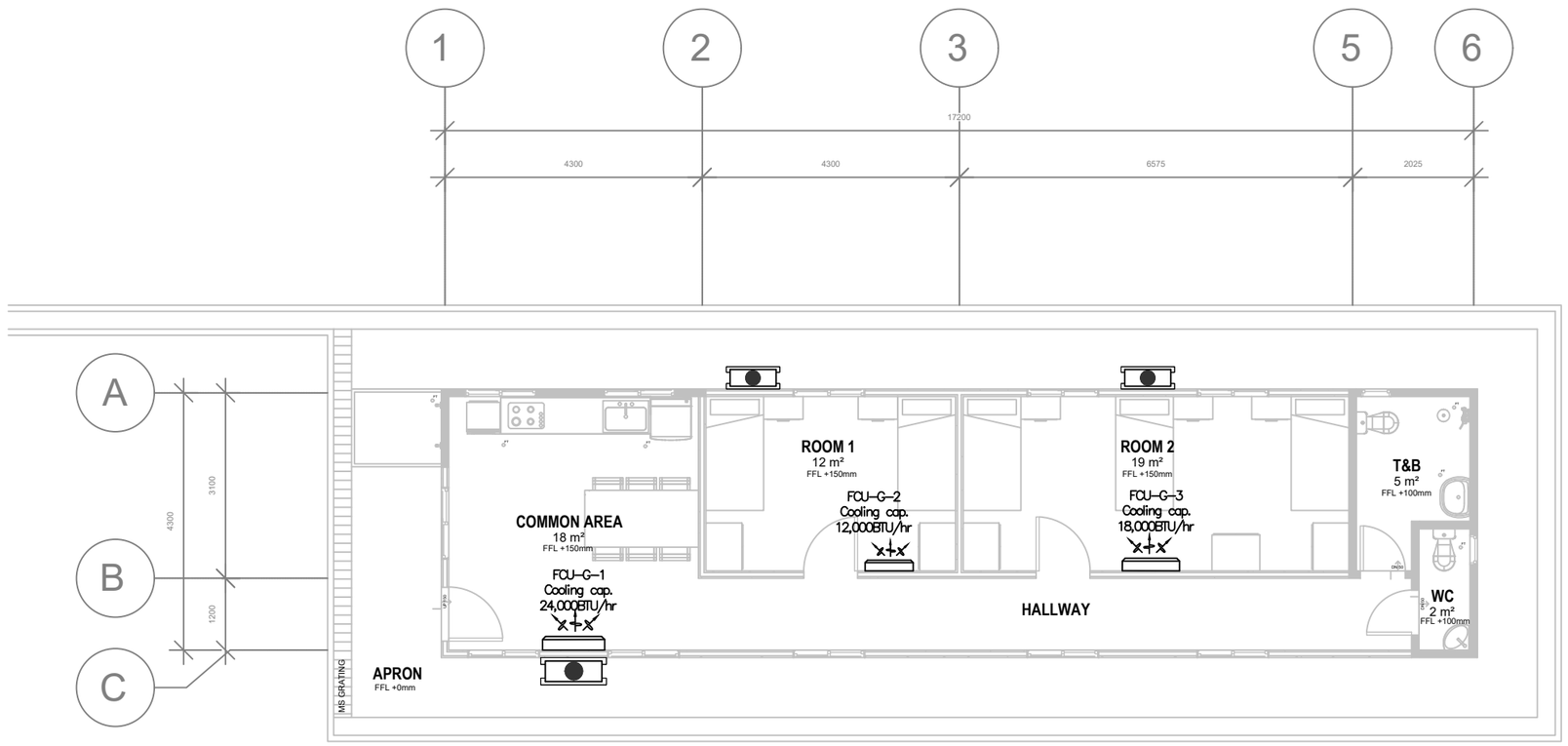

GROUND FLOOR PLAN

Copyright.©
"This document is and shall remain the property of JOMC. The document may only be used for the purpose for which it was commisioned and in accordance with the terms of engagement for the commision. Unauthorised use of the document in any way is prohibited."

GENERAL NOTES	REV	DESCRIPTION	DATE	BY

CLIENT
DEPARTMENT OF AGRICULTURE AND AGRIFOOD, BRUNEI DARUSSALAM

ARCHITECT
KHA arkitek
KHA Arkitek
P.O Box 2/72
MPC,
Old Airport,
Berakas
BB3122
Contact No: 2610380

ENGINEER
Jurutera OMC
Chartered Engineers
Engineering Consultant, Design, Management & Services
2nd Floor, Unit 17 & 18, Block C, Melabau Complex,
Jalan Serusop, BB2313, B. S. B. Brunei Darussalam
Tel : 673-2342688 Fax : 673-2342483
Email : juruteraomc@yahoo.com
JURUTERA OMC Engineering Consultant, Design, Management Services
CHIN LEE TUCK
REGISTRATION NO: BAPEQS/PE2022/0007-E

PROJECT TITLE
PROPOSED NEW 1 UNIT STANDARD DESIGN OF FARM LABOUR QUARTERS, BRUNEI DARUSSALAM (FOR 5 PERSONS) - OPTION 1

DRAWING TITLE
GROUND FLOOR PLAN AIR-CONDITIONING LAYOUT - (FOR 5 PERSONS OPTION 1)

DRAWN BY:	FS	DESIGN BY:	FS	SCALE:	1:100
CHECKED BY:	CLT	DATE:	SEPT 2022	JOB NO:	254
DRAWING NO:	JOMC/254/AC/200				

13 September, 2022 - 2:10 PM \\JOMCDATABANK\SharedFolder\JOMC Projects\254 - Design Services for Agricultural Farm Labour Quarters (M&E)\1. Drawings\2. Workshop drawings\220906\REV1\ JOMC-254-5 PERSONS OPT1-M&E.dwg

LEGEND

	1X18W LED Tube Lighting to DES approved type		1 X 10A 1 Gang 1 way lighting switch to DES approved type
	18W LED Wall Light to DES/DME approved type to be installed at 0.30m height from floor		1 X 10A 2 Gang 1 way lighting switch to DES approved type
	Ceiling Fan to DES approved type		1 X 10A 3 Gang 1 way lighting switch to DES approved type
	Exhaust Fan to DES approved type	EF	1 X 10A 1 Gang 1 way exhaust fan switch to DES approved type

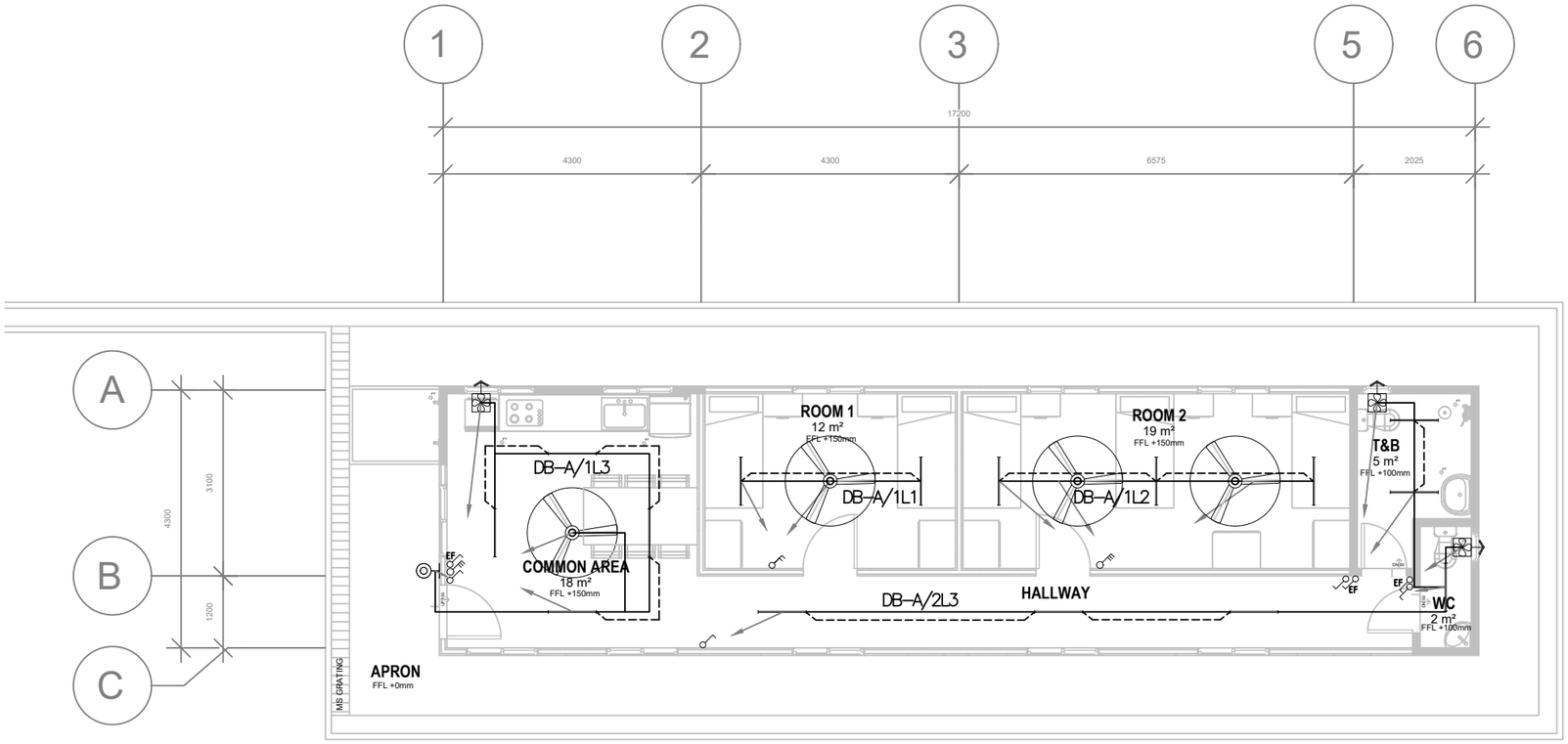

GROUND FLOOR PLAN

Copyright.©
"This document is and shall remain the property of JOMC. The document may only be used for the purpose for which it was commisioned and in accordance with the terms of engagement for the commision. Unauthorised use of the document in any way is prohibited."

GENERAL NOTES

REV	DESCRIPTION	DATE	BY

CLIENT

DEPARTMENT OF AGRICULTURE AND AGRIFOOD, BRUNEI DARUSSALAM

ARCHITECT

KHA arkitek
KHA Arkitek
P.O Box 2/2
MPC,
Old Airport,
Berakas
BB3122
Contact No: 2610380

ENGINEER

Jurutera OMC
Chartered Engineers
Engineering Consultant, Design, Management & Services
2nd Floor, Unit 17 & 18, Block C, Melabau Complex,
Jalan Serusop, BB2313, B. S. B. Brunei Darussalam
Tel : 673-2342688 Fax : 673-2342483
Email : juruteraomc@yahoo.com

JURUTERA OMC Engineering Consultant, Design Management Services
CHIN LEE TUCK
REGISTRATION NO: BAPEQS/PE20220007-E

PROJECT TITLE

PROPOSED NEW 1 UNIT STANDARD DESIGN OF FARM LABOUR QUARTERS, BRUNEI DARUSSALAM (FOR 5 PERSONS) - OPTION 1

DRAWING TITLE

GROUND FLOOR PLAN LIGHTING LAYOUT - (FOR 5 PERSONS OPTION 1)

DRAWN BY:	FS	DESIGN BY:	FS	SCALE:	1:100
CHECKED BY:	CLT	DATE:	SEPT 2022	JOB NO:	254
DRAWING NO:	JOMC/254/L/200				

12 September, 2022 - 3:15 PM \\JOMCDATABANK\SharedFolder\JOMC Projects\254 - Design Services for Agricultural Farm Labour Quarters (M&E)\1. Drawings\2. Workshop drawings\220906\REV1\ JOMC-254-5 PERSONS OPT1-M&E.dwg

LEGEND	
SYMBOL	DESCRIPTION
	1X13A SWITCH SOCKET OUTLET TO DES / DME APPROVED TYPE
	2X13A SWITCH SOCKET OUTLET TO DES / DME APPROVED TYPE
WP	1X13A WEATHERPROOF SWITCH SOCKET OUTLET TO DES / DME APPROVED TYPE
AC	1X15A S.S.O FOR AC INSTALLED ON THE HIGH LEVEL TO DES / DME APPROVED TYPE
	ELECTRICAL DISTRIBUTION BOARD TO DES / DME APPROVED TYPE
C	COOKER UNIT C/W 1x13A SSO TO DES / DME APPROVED TYPE
	WATER HEATER @ 5 GALLONS CAPACITY C/W 20A DOUBLE POLE NEON SWITCH
M	PREPAID METER TO DES / DME APPROVED TYPE

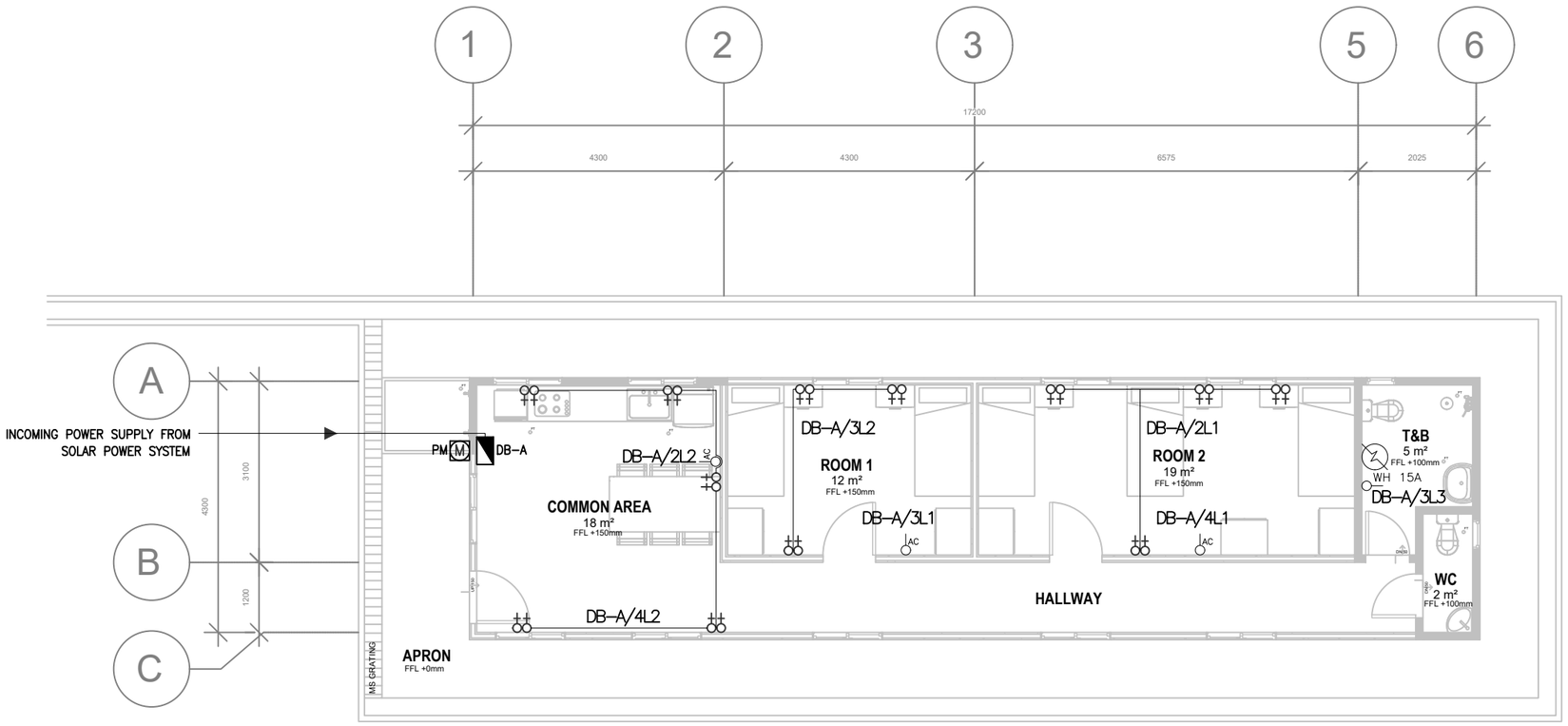

GROUND FLOOR PLAN

13 September, 2022 - 9:25 AM \\JOMCDATABANK\SharedFolder\JOMC Projects\254 - Design Services for Agricultural Farm Labour Quarters (M&E)\1. Drawings\2. Workshop drawings\220906\REV1\ JOMC-254-5 PERSONS OPT1-M&E.dwg

Copyright.©
"This document is and shall remain the property of JOMC. The document may only be used for the purpose for which it was commisioned and in accordance with the terms of engagement for the commision. Unauthorised use of the document in any way is prohibited."

GENERAL NOTES

REV	DESCRIPTION	DATE	BY

CLIENT
DEPARTMENT OF AGRICULTURE AND AGRIFOOD, BRUNEI DARUSSALAM

ARCHITECT
KHA arktek
KHA Arktek
P.O Box 2/2
MPC,
Old Airport,
Berakas
BB3122
Contact No: 2610380

ENGINEER
Jurutera OMC
Chartered Engineers
Engineering Consultant, Design, Management & Services
2nd Floor, Unit 17 & 18, Block C, Melabau Complex,
Jalan Serusop, BB2313, B. S. B. Brunei Darussalam
Tel : 673-2342688 Fax : 673-2342483
Email : juruteraomc@yahoo.com
JURUTERA OMC Engineering Consultant, Design, Management Services
CHIN LEE TUCK
REGISTRATION NO: BAPEGS/PE20220007-E

PROJECT TITLE
PROPOSED NEW 1 UNIT STANDARD DESIGN OF FARM LABOUR QUARTERS, BRUNEI DARUSSALAM (FOR 5 PERSONS) - OPTION 1

DRAWING TITLE
GROUND FLOOR PLAN POWER LAYOUT
- (FOR 5 PERSONS OPTION 1)

DRAWN BY:	FS	DESIGN BY:	FS	SCALE:	1:100
CHECKED BY:	CLT	DATE:	SEPT 2022	JOB NO:	254
DRAWING NO:	JOMC/254/P/200				

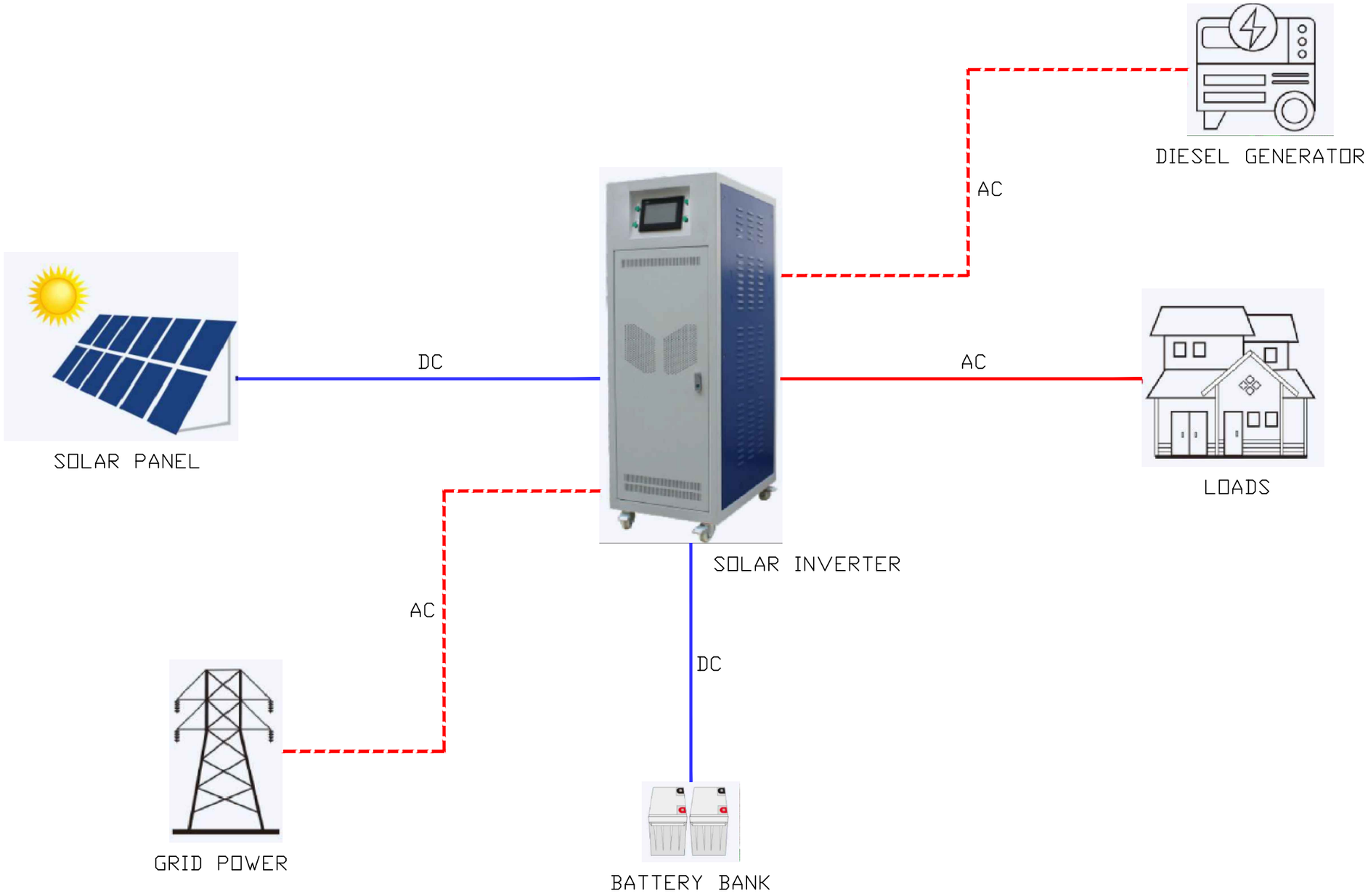

SOLAR SYSTEM LAYOUT DIAGRAM

Copyright.©
"This document is and shall remain the property of JOMC. The document may only be used for the purpose for which it was commisioned and in accordance with the terms of engagement for the commision. Unauthorised use of the document in any way is prohibited."

GENERAL NOTES	REV	DESCRIPTION	DATE	BY

CLIENT
DEPARTMENT OF AGRICULTURE AND AGRIFOOD, BRUNEI DARUSSALAM

ARCHITECT
KHA arkitek
KHA Arkitek
P.O Box 2/72
MPC,
Old Airport,
Berakas
BB3122
Contact No: 2610380

ENGINEER
Jurutera OMC
Chartered Engineers
Engineering Consultant, Design, Management & Services
2nd Floor, Unit 17 & 18, Block C, Melabau Complex,
Jalan Serusop, BB2313, B. S. B. Brunei Darussalam
Tel : 673-2342688 Fax : 673-2342483
Email : juruteraomc@yahoo.com
JURUTERA OMC Engineering Consultant, Design, Management Services
CHIN LEE TUCK
REGISTRATION NO: BAPEQS/PE2022/0007-E

PROJECT TITLE
PROPOSED NEW 1 UNIT STANDARD DESIGN OF FARM LABOUR QUARTERS, BRUNEI DARUSSALAM (FOR 5 PERSONS) - OPTION 1

DRAWING TITLE
SOLAR SYSTEM LAYOUT DIAGRAM
- (FOR 5 PERSONS OPTION 1)

DRAWN BY:	FS	DESIGN BY:	FS	SCALE:	NTS
CHECKED BY:	CLT	DATE:	SEPT 2022	JOB NO:	254
DRAWING NO:	JOMC/254/P/300				

12 September, 2022 - 4:02 PM \\JOMCDATABANK\SharedFolder\JOMC Projects\254 - Design Services for Agricultural Farm Labour Quarters (M&E)\1. Drawings\2. Workshop drawings\220906\REV1\ JOMC-254-5 PERSONS OPT1-M&E.dwg

SYMBOL	DESCRIPTION
FB	FIRE BLANKET TO BOMBA APPROVED TYPE
E	10W EMERGENCY LIGHTING TO BOMBA APPROVED TYPE
S	SMOKE DETECTOR TO BOMBA APPROVED TYPE
▲	4.5kg ABC DRY POWDER FIRE EXTINGUISHER TO BOMBA APPROVED TYPE
△	2.3kg CO2 FIRE EXTINGUISHER TO BOMBA APPROVED TYPE
MFAP ⊠	FIRE ALARM PANEL TO BOMBA APPROVED TYPE

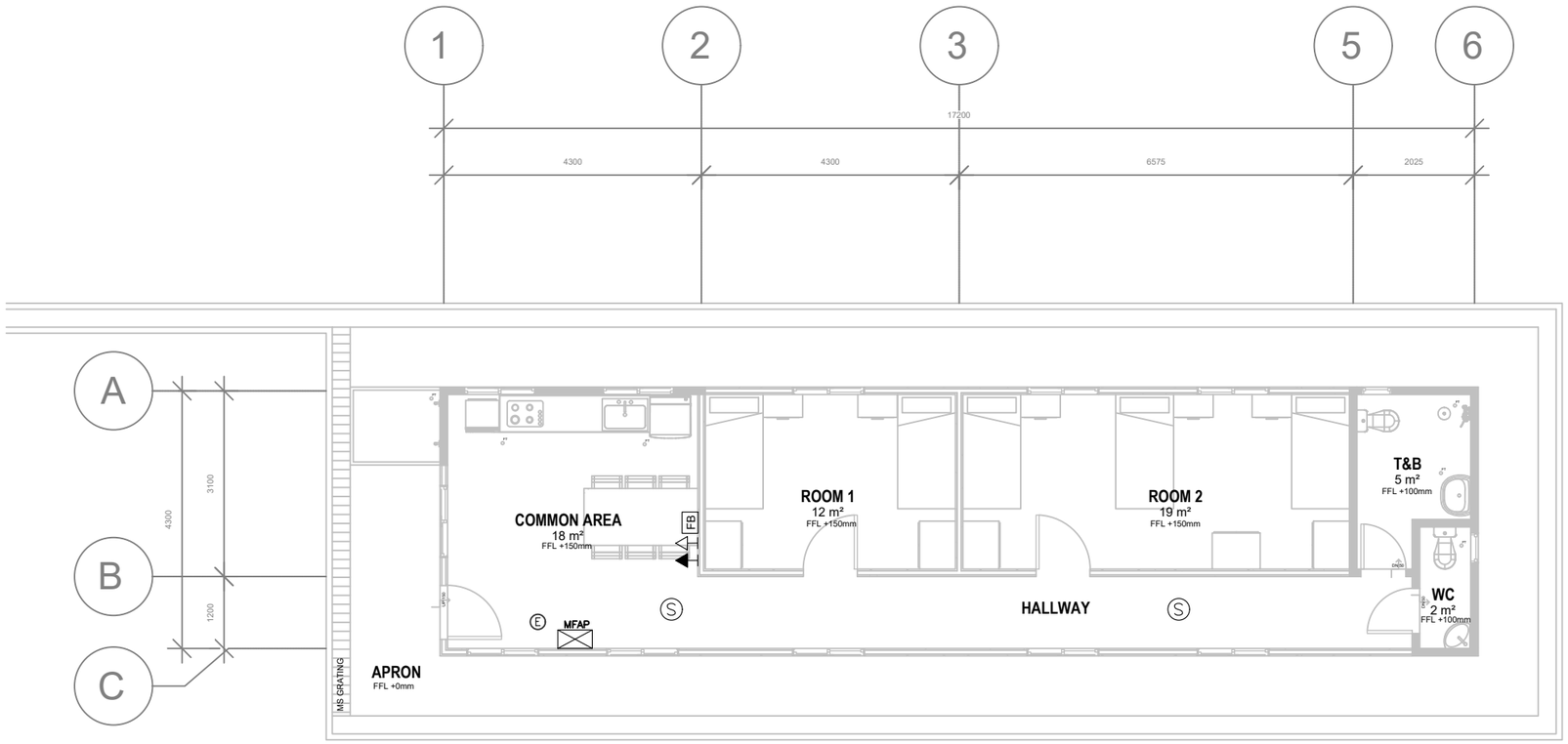

GROUND FLOOR PLAN

15 September, 2022 - 11:01 AM \\JOMCDATABANK\SharedFolder\JOMC Projects\254 - Design Services for Agricultural Farm Labour Quarters (M&E)\1. Drawings\2. Workshop drawings\220906\REV1\ JOMC-254-5 PERSONS OPT1-M&E.dwg

Copyright.©
"This document is and shall remain the property of JOMC. The document may only be used for the purpose for which it was commisioned and in accordance with the terms of engagement for the commision. Unauthorised use of the document in any way is prohibited."

GENERAL NOTES

REV	DESCRIPTION	DATE	BY

CLIENT
DEPARTMENT OF AGRICULTURE AND AGRIFOOD, BRUNEI DARUSSALAM

ARCHITECT
KHA arktek
KHA Arktek
P.O Box 2/2
MPC,
Old Airport,
Berakas
BB3122
Contact No: 2610380

ENGINEER
Jurutera OMC
Chartered Engineers
Engineering Consultant, Design, Management & Services
2nd Floor, Unit 17 & 18, Block C, Melabau Complex,
Jalan Serusop, BB2313, B. S. B. Brunei Darussalam
Tel : 673-2342688 Fax : 673-2342483
Email : juruteraomc@yahoo.com
JURUTERA OMC Engineering Consultant, Design, Management Services
CHIN LEE TUCK
REGISTRATION NO: BAPEGS/PE20220007-E

PROJECT TITLE
PROPOSED NEW 1 UNIT STANDARD DESIGN OF FARM LABOUR QUARTERS, BRUNEI DARUSSALAM (FOR 5 PERSONS) - OPTION 1

DRAWING TITLE
GROUND FLOOR PLAN FIRE PROTECTION LAYOUT - (FOR 5 PERSONS OPTION 1)

DRAWN BY:	FS	DESIGN BY:	FS	SCALE:	1:100
CHECKED BY:	CLT	DATE:	SEPT 2022	JOB NO:	254
DRAWING NO:	JOMC/254/F/200				

SYMBOL	DESCRIPTION
	TELEPHONE OUTLET POINT (WITH INTERCOM) TO BE INSTALLED AT 350mm HEIGHT TO UNN APPROVED TYPE
FJB	FOOT JUNCTION BOX (FJB) TO UNN APPROVED TYPE
	FIBER DISTRIBUTION TERMINAL (FDT) TO UNN APPROVED TYPE
	ACCESS TERMINATION BOX TO UNN APPROVED TYPE
AP	ACCESS POINT TO UNN APPROVED TYPE

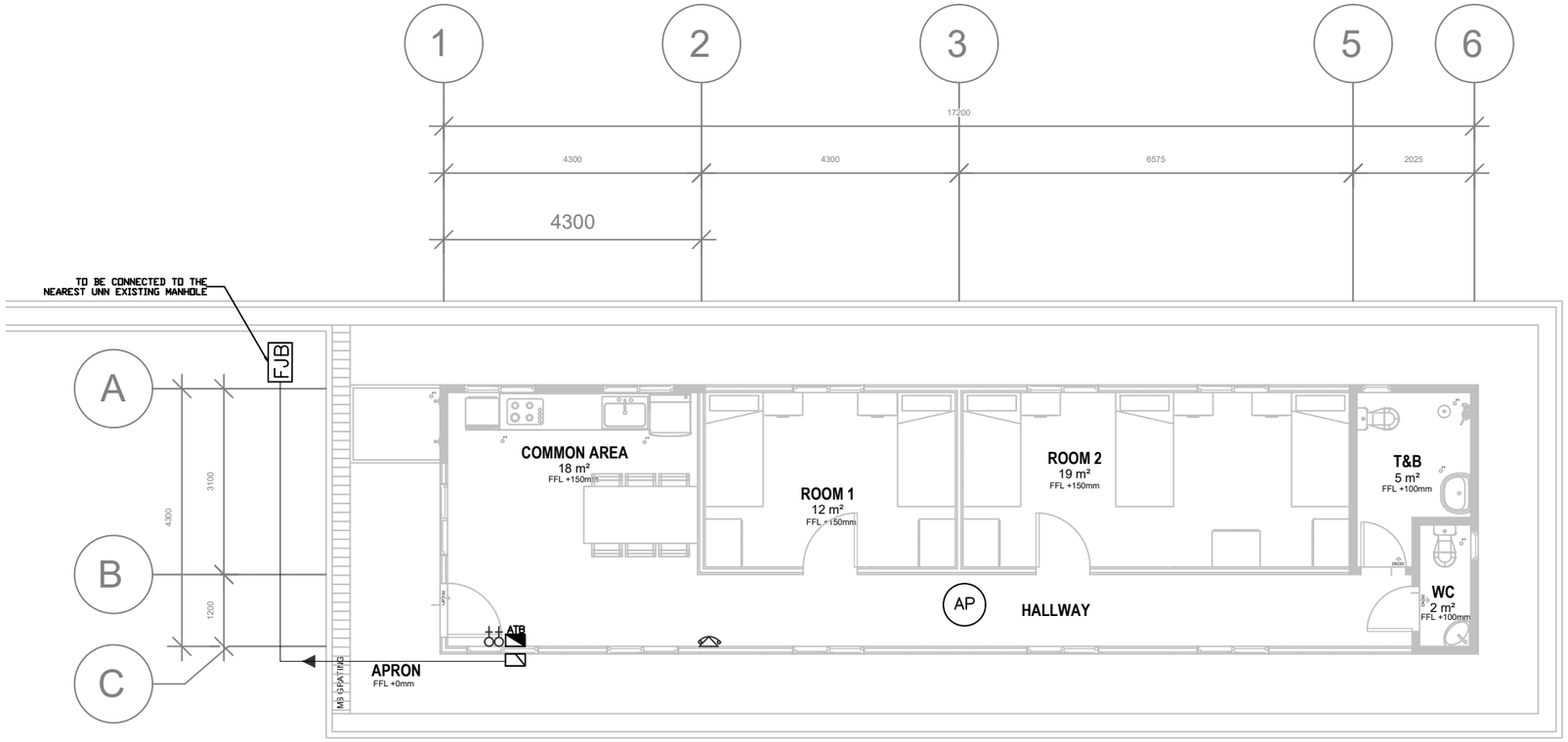

GROUND FLOOR PLAN

Copyright.©
"This document is and shall remain the property of JOMC. The document may only be used for the purpose for which it was commisioned and in accordance with the terms of engagement for the commision. Unauthorised use of the document in any way is prohibited."

GENERAL NOTES	REV	DESCRIPTION	DATE	BY

CLIENT
DEPARTMENT OF AGRICULTURE AND AGRIFOOD, BRUNEI DARUSSALAM

ARCHITECT
KHA arkitek
KHA Arkitek
P.O Box 2/72
MPC,
Old Airport,
Berakas
BB3122
Contact No: 2610380

ENGINEER
Jurutera OMC
Chartered Engineers
Engineering Consultant, Design, Management & Services
2nd Floor, Unit 17 & 18, Block C, Melabau Complex,
Jalan Serusop, BB2313, B. S. B. Brunei Darussalam
Tel : 673-2342688 Fax : 673-2342483
Email : juruteraomc@yahoo.com
JURUTERA OMC Engineering Consultant, Design, Management & Services
CHIN LEE TUCK
REGISTRATION NO: BAPEQS/PE20220007-E

PROJECT TITLE
PROPOSED NEW 1 UNIT STANDARD DESIGN OF FARM LABOUR QUARTERS, BRUNEI DARUSSALAM (FOR 5 PERSONS) - OPTION 1

DRAWING TITLE
GROUND FLOOR PLAN TELEPHONE LAYOUT - (FOR 5 PERSONS OPTION 1)

DRAWN BY:	FS	DESIGN BY:	FS	SCALE:	1:100
CHECKED BY:	CLT	DATE:	SEPT 2022	JOB NO:	254
DRAWING NO:	JOMC/254/T/200				

13 September, 2022 - 2:09 PM \\JOMCDATABANK\SharedFolder\JOMC Projects\254 - Design Services for Agricultural Farm Labour Quarters (M&E)\1 Drawings\2. Workshop drawings\220906\REV1\ JOMC-254-5 PERSONS OPT1-M&E.dwg

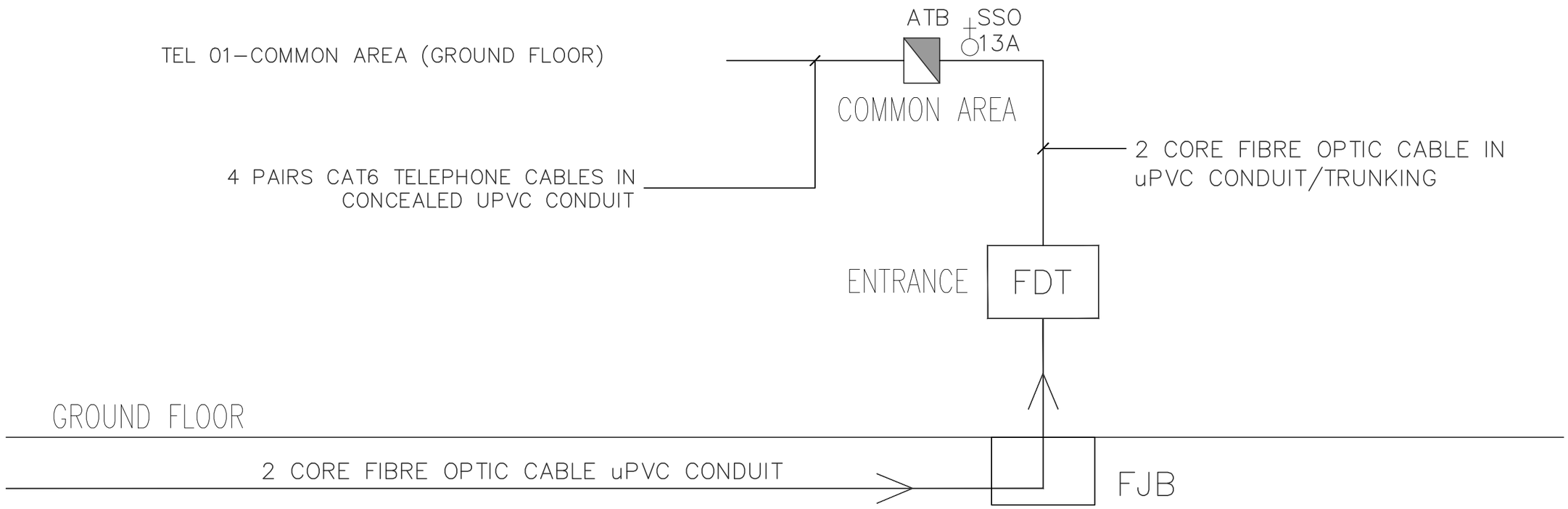

TELEPHONE SYSTEM SCHEMATIC DIAGRAM

12 September, 2022 - 3:37 PM \\JOMCDATABANK\SharedFolder\JOMC Projects\254 - Design Services for Agricultural Farm Labour Quarters (M&E)\1. Drawings\2. Workshop drawings\220906\REV1\ JOMC-254-5 PERSONS OPT1-M&E.dwg

Copyright.©
"This document is and shall remain the property of JOMC. The document may only be used for the purpose for which it was commisioned and in accordance with the terms of engagement for the commision. Unauthorised use of the document in any way is prohibited."

GENERAL NOTES

REV	DESCRIPTION	DATE	BY

CLIENT
DEPARTMENT OF AGRICULTURE AND AGRIFOOD, BRUNEI DARUSSALAM

ARCHITECT
KHA arkitek
KHA Arkitek
P.O Box 2/72
MPC,
Old Airport,
Berakas
BB3122
Contact No: 2610380

ENGINEER
Jurutera OMC
Chartered Engineers
Engineering Consultant, Design, Management & Services
2nd Floor, Unit 17 & 18, Block C, Melabau Complex,
Jalan Serusop, BB2313, B. S. B. Brunei Darussalam
Tel : 673-2342688 Fax : 673-2342483
Email : juruteraomc@yahoo.com
JURUTERA OMC Engineering Consultant, Design, Management Services
CHIN LEE TUCK
REGISTRATION NO: BAPEQS/PE20220007-E

PROJECT TITLE
PROPOSED NEW 1 UNIT STANDARD DESIGN OF FARM LABOUR QUARTERS, BRUNEI DARUSSALAM (FOR 5 PERSONS) - OPTION 1

DRAWING TITLE
TELEPHONE SYSTEM SCHEMATIC DIAGRAM - (FOR 5 PERSONS OPTION 1)

DRAWN BY:	FS	DESIGN BY:	FS	SCALE:	NTS
CHECKED BY:	CLT	DATE:	SEPT 2022	JOB NO:	254
DRAWING NO:	JOMC/254/T/300				

LEGEND	
⋈	Gate Valve
KS	Kitchen Sink
WC	Water Closet
WT	Water Tap
WB	Water Basin
———	Cold Water
- - - - -	Hot Water

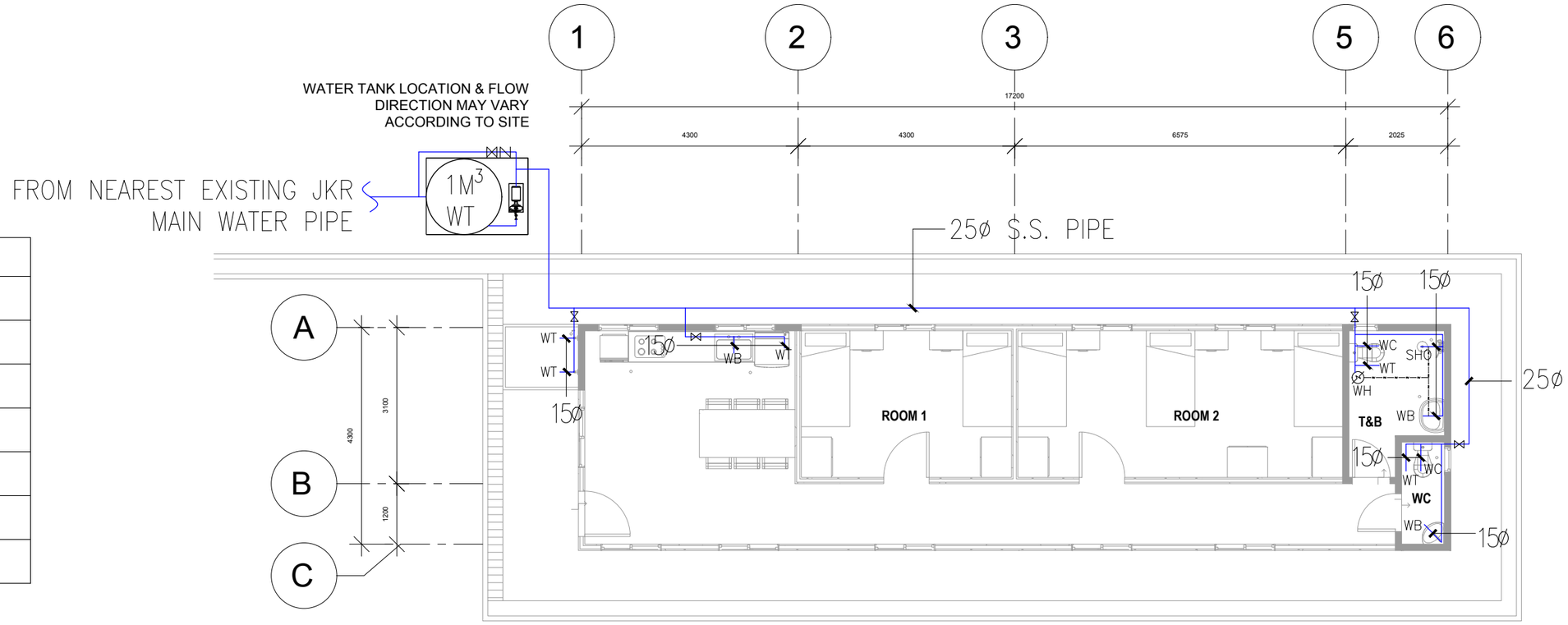

GROUND FLOOR PLAN

Copyright.©
"This document is and shall remain the property of JOMC. The document may only be used for the purpose for which it was commisioned and in accordance with the terms of engagement for the commision. Unauthorised use of the document in any way is prohibited."

GENERAL NOTES

REV	DESCRIPTION	DATE	BY

CLIENT

DEPARTMENT OF AGRICULTURE AND AGRIFOOD, BRUNEI DARUSSALAM

ARCHITECT

KHA arkitek
KHA Arkitek
P.O Box 2/72
MPC,
Old Airport,
Berakas
BB3122
Contact No: 2610380

ENGINEER

Jurutera OMC
Chartered Engineers
Engineering Consultant, Design, Management & Services
2nd Floor, Unit 17 & 18, Block C, Melabau Complex,
Jalan Serusop, BB2313, B. S. B. Brunei Darussalam
Tel : 673-2342688 Fax : 673-2342483
Email : juruteraomc@yahoo.com
CHIN LEE TUCK
REGISTRATION NO: BAPEQS/PE20220007-E

PROJECT TITLE

PROPOSED NEW 1 UNIT STANDARD DESIGN OF FARM LABOUR QUARTERS, BRUNEI DARUSSALAM (FOR 5 PERSONS) - OPTION 1

DRAWING TITLE

GROUND FLOOR PLAN PLUMBING LAYOUT
(FOR 5 PERSONS OPTION 1)

DRAWN BY:	AIM	DESIGN BY:	AIM	SCALE:	1:100
CHECKED BY:	CLT	DATE:	SEPT 2022	JOB NO:	254
DRAWING NO:	JOMC/254/W/200				

15 September, 2022 - 11:54 AM C:\Users\user\Desktop\MIRUL\254 - agricultural farm labour quarter\ JOMC-254-5 PERSONS OPT1-P&S.dwg

NOTES:

HOT WATER PIPEWORK

1. ALL HOT WATER PIPEWORK TO BE COPPER TO BS 2871 : 1971 M TABLE X. JOINTS COMPRESSION FITTING TO BS 864 : PART 2 : 1983 TYPE A.
2. HOT WATER PIPEWORK EMBEDDED IN WALL SHALL BE DENSO OR POLYETHLENE WRAPPED.
3. HOT WATER PIPEWORK NOT EMBEDDED IN WALL TO BE INSULATED WITH 25MM PREFORMED FIBRE GLASS INSULATION WITH FACTORY APPLIED ALUMINIUM JACKET SEAL JOINTS WITH PRESSURE SENSITIVE TAPE.

COLD WATER PIPEWORK

1. ALL COLD WATER PIPEWORK ABOVE GROUND TO BE :
   i) BELOW 80 MM
      PIPEWORK TO BE STAINLESS STEEL TO BS 4127.
      JOINTS COMPRESSION & FITTINGS TO
      BS 864 : PART 2.
2. ALL COLD WATER PIPEWORK BURIED UNDERGROUND TO BE :
   i) 80 MM AND BELOW
      STAINLESS STEEL PIPE TO BS 41271.
      JOINTS COMPRESSION & FITTINGS TO
      BS 864 : PART 2.
   ii) 80 MM AND ABOVE
      MDPE PIPE TO BS 6920 : 1988 : PART 2.
      JOINTS COMPRESSION & FITTINGS TO
      DIN 16928 : PART 1 TO 12
3. ALL FINAL CONNECTION TO BE 15ø UNLESS OTHERWISE STATED.
4. PROVIDE A STOP COCK FOR WATER INLET TO EVERY PLUMBING & SANITARY FIXTURES.
5. ALL STOP COCKS TO BE CHROME PLATED TYPE.
6. ALL PIPES ARE IN MM.
7. WATER PIPE 65 MM AND BELOW USED FOR CONNECTION BETWEEN THE WATER MAIN TAP-OFF AND THE WATER METER SHALL BE STAINLESS STEELS PIPE TO BS4127:PART 2.

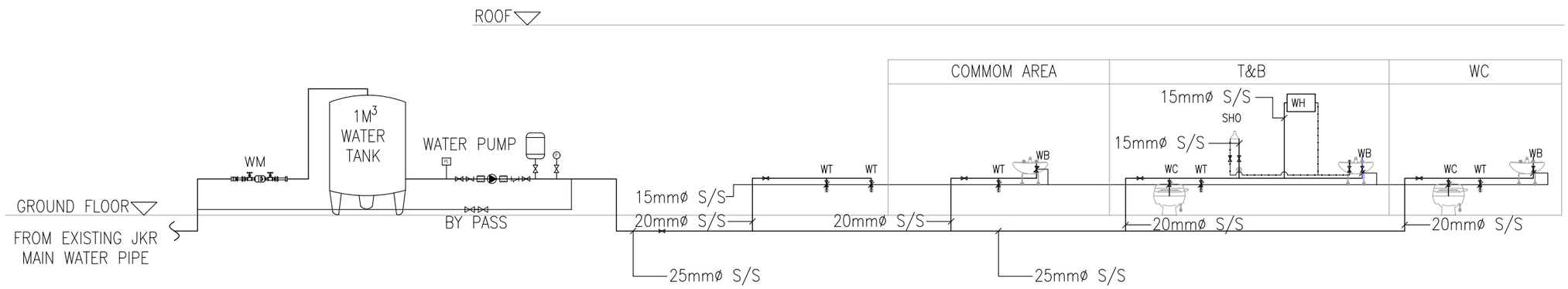

Copyright ©
"This document is and shall remain the property of JOMC. The document may only be used for the purpose for which it was commisioned and in accordance with the terms of engagement for the commision. Unauthorised use of the document in any way is prohibited."

GENERAL NOTES

REV	DESCRIPTION	DATE	BY

CLIENT
DEPARTMENT OF AGRICULTURE AND AGRIFOOD, BRUNEI DARUSSALAM

ARCHITECT
KHA arkitek
KHA Arkitek
P.O Box 2/72
MPC,
Old Airport,
Berakas
BB3122
Contact No: 2610380

ENGINEER
Jurutera OMC
Chartered Engineers
Engineering Consultant, Design, Management & Services
2nd Floor, Unit 17 & 18, Block C, Melabau Complex,
Jalan Serusop, BB2313, B. S. B. Brunei Darussalam
Tel : 673-2342688 Fax : 673-2342483
Email : juruteraomc@yahoo.com
JURUTERA OMC Engineering Consultant Design Services Brunei Darussalam
CHIN LEE TUCK
REGISTRATION NO: BAPE(G)/PE20220007-E

PROJECT TITLE
PROPOSED NEW 1 UNIT STANDARD DESIGN OF FARM LABOUR QUARTERS, BRUNEI DARUSSALAM (FOR 5 PERSONS) - OPTION 1

DRAWING TITLE
PLUMBING
SCHEMATIC DIAGRAM
(FOR 5 PERSONS OPTION 1)

DRAWN BY:	AIM	DESIGN BY:	AIM	SCALE:	NTS
CHECKED BY:	CLT	DATE:	SEPT 2022	JOB NO:	254
DRAWING NO:	JOMC/254/W/300				

15 September, 2022 - 11:54 AM C:\Users\user\Desktop\MIRUL\254 - agricultural farm labour quarter\ JOMC-254-5 PERSONS OPT1-P&S.dwg

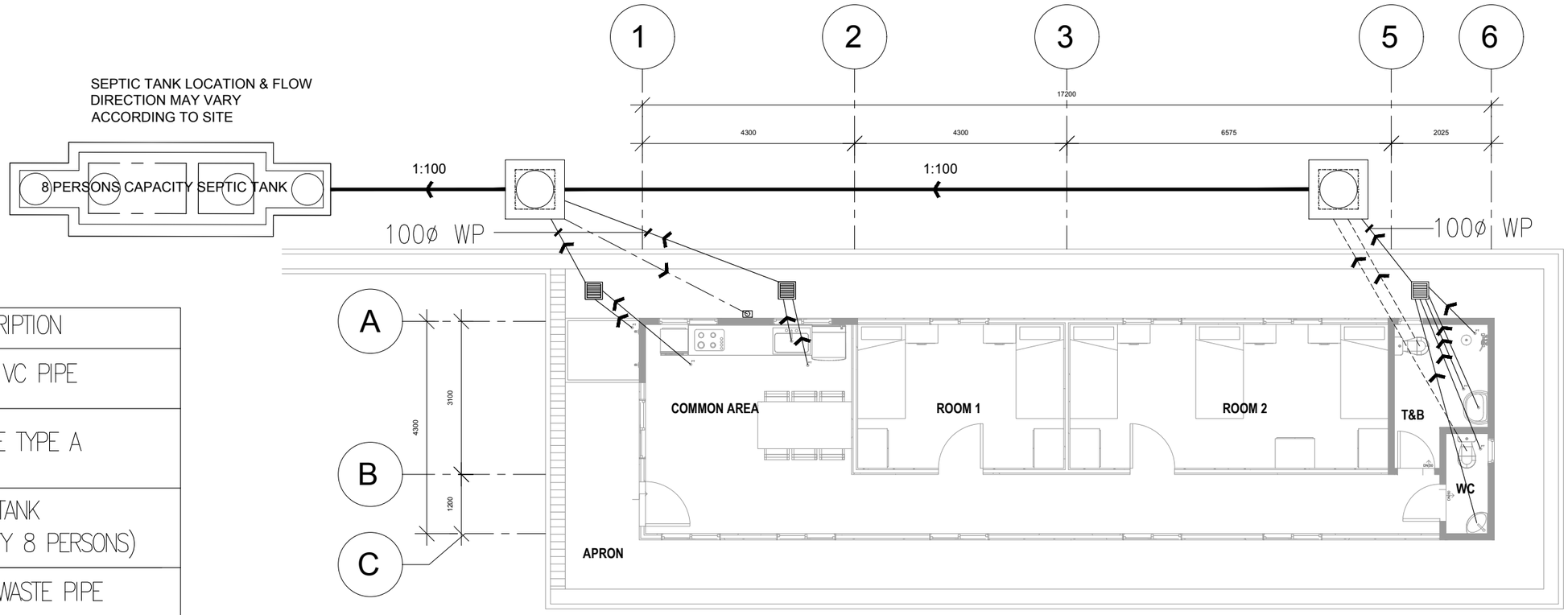

GROUND FLOOR PLAN

LEGEND	DESCRIPTION
	150MMø VC PIPE
	MANHOLE TYPE A
	SEPTIC TANK (CAPACITY 8 PERSONS)
	80MMø WASTE PIPE
	100MMø SOIL PIPE
	100MMø VENT PIPE
	GULLY TRAP

15 September, 2022 - 11:56 AM C:\Users\user\Desktop\MIRUL\254 - agricultural farm labour quarter\ JOMC-254-5 PERSONS OPT1-P&S.dwg

Copyright ©
"This document is and shall remain the property of JOMC. The document may only be used for the purpose for which it was commisioned and in accordance with the terms of engagement for the commision. Unauthorised use of the document in any way is prohibited."

GENERAL NOTES

REV	DESCRIPTION	DATE	BY

CLIENT

DEPARTMENT OF AGRICULTURE AND AGRIFOOD, BRUNEI DARUSSALAM

ARCHITECT

KHA arkitek
KHA Arkitek
P.O Box 272
MPC,
Old Airport,
Berakas
BB3122
Contact No: 2610380

ENGINEER

Jurutera OMC
Chartered Engineers
Engineering Consultant, Design, Management & Services
2nd Floor, Unit 17 & 18, Block C, Melabau Complex,
Jalan Serusop, BB2313, B. S. B. Brunei Darussalam
Tel : 673-2342688 Fax : 673-2342483
Email : juruteraomc@yahoo.com
JURUTERA OMC Engineering Consultant, Design, Management & Services
CHIN LEE TUCK
REGISTRATION NO: BAPEQS/PE20220007-E

PROJECT TITLE

PROPOSED NEW 1 UNIT STANDARD DESIGN OF FARM LABOUR QUARTERS, BRUNEI DARUSSALAM (FOR 5 PERSONS) - OPTION 1

DRAWING TITLE

GROUND FLOOR PLAN SANITARY LAYOUT
(FOR 5 PERSONS OPTION 1)

DRAWN BY:	AIM	DESIGN BY:	AIM	SCALE:	1:100
CHECKED BY:	CLT	DATE:	SEPT 2022	JOB NO:	254
DRAWING NO:	JOMC/254/SEW/200				

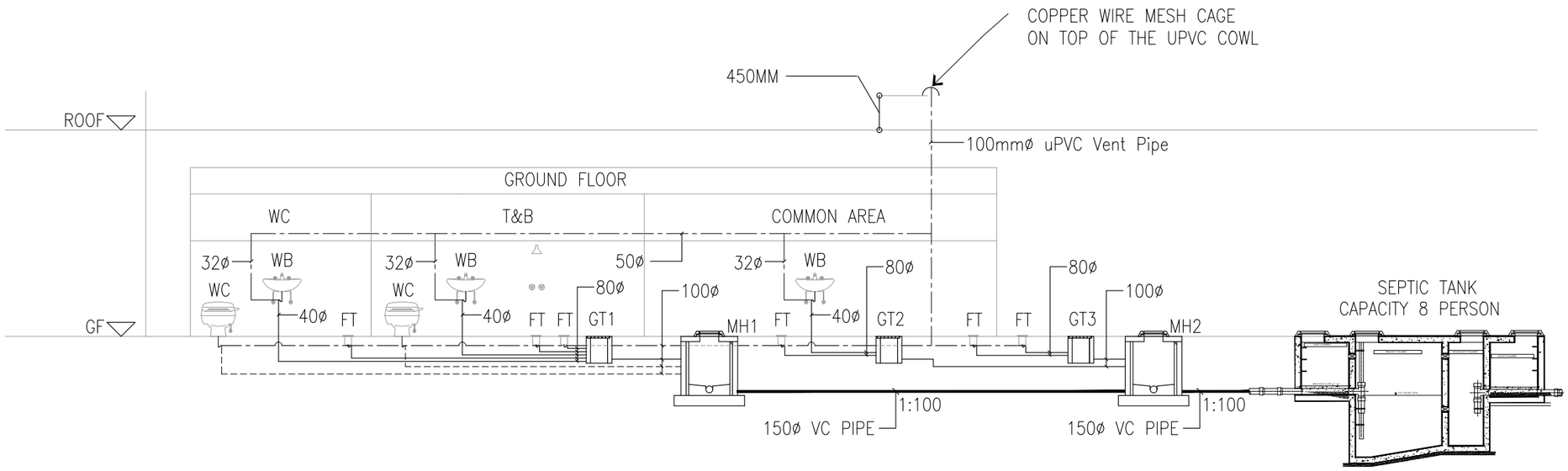

Copyright.©
"This document is and shall remain the property of JOMC. The document may only be used for the purpose for which it was commisioned and in accordance with the terms of engagement for the commision. Unauthorised use of the document in any way is prohibited."

GENERAL NOTES

REV	DESCRIPTION	DATE	BY

CLIENT

DEPARTMENT OF AGRICULTURE AND AGRIFOOD, BRUNEI DARUSSALAM

ARCHITECT

KHA arkitek
KHA Arkitek
P.O Box 2/72
MPC,
Old Airport,
Berakas
BB3122
Contact No: 2610380

ENGINEER

Jurutera OMC
Chartered Engineers
Engineering Consultant, Design, Management & Services
2nd Floor, Unit 17 & 18, Block C, Melabau Complex,
Jalan Serusop, BB2313, B. S. B. Brunei Darussalam
Tel : 673-2342688 Fax : 673-2342483
Email : juruteraomc@yahoo.com
JURUTERA OMC Engineering Consultant Darussalam
CHIN LEE TUCK
REGISTRATION NO: BAPEQS/PE2022/007-E

PROJECT TITLE

PROPOSED NEW 1 UNIT STANDARD DESIGN OF FARM LABOUR QUARTERS, BRUNEI DARUSSALAM (FOR 5 PERSONS) - OPTION 1

DRAWING TITLE

SANITARY
SCHEMATIC DIAGRAM
(FOR 5 PERSONS OPTION 1)

DRAWN BY:	AIM	DESIGN BY:	AIM	SCALE:	NTS
CHECKED BY:	CLT	DATE:	SEPT 2022	JOB NO:	254
DRAWING NO:	JOMC/254/SEW/300				

15 September, 2022 - 11:04 AM C:\Users\user\Desktop\MIRUL\254 - agricultural farm labour quarter\ JOMC-254-5 PERSONS OPT1-M&E.dwg

NOTE:
CONTRACTOR TO DETERMINE THE FINAL DATUM LEVEL AT SITE.

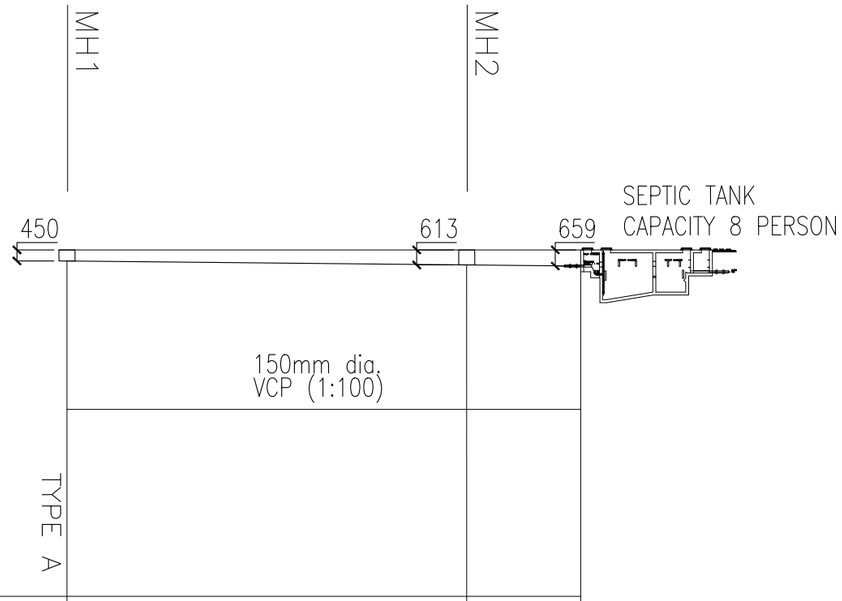

DATUM LEVEL +00.00m

PROPOSED GROUND LEVEL (m)	00.00	00.00	00.00
PROPOSED SEWER INVERT LEVEL	−0.45	−0.61	−0.66
DEPTH OF MANHOLE EXCAVATION (m)	−0.45	−0.61	−0.66
DISTANCE IN METER	0.00	16.30	4.65

Copyright ©
"This document is and shall remain the property of JOMC. The document may only be used for the purpose for which it was commisioned and in accordance with the terms of engagement for the commision. Unauthorised use of the document in any way is prohibited."

GENERAL NOTES

REV	DESCRIPTION	DATE	BY

CLIENT
DEPARTMENT OF AGRICULTURE AND AGRIFOOD, BRUNEI DARUSSALAM

ARCHITECT
KHA arkitek
KHA Arkitek
P.O Box 2/72
MPC,
Old Airport,
Berakas
BB3122
Contact No: 2610380

ENGINEER
Jurutera OMC
Chartered Engineers
Engineering Consultant, Design, Management & Services
2nd Floor, Unit 17 & 18, Block C, Melabau Complex,
Jalan Serusop, BB2313, B. S. B. Brunei Darussalam
Tel : 673-2342688 Fax : 673-2342483
Email : juruteraomc@yahoo.com
JURUTERA OMC Engineering Consultant Design Management & Services Brunei Darussalam
CHIN LEE TUCK
REGISTRATION NO: BAPEQS/PE20220007-E

PROJECT TITLE
PROPOSED NEW 1 UNIT STANDARD DESIGN OF FARM LABOUR QUARTERS, BRUNEI DARUSSALAM (FOR 5 PERSONS) - OPTION 1

DRAWING TITLE
SANITARY
SEWER LINE INVERT LEVEL
(FOR 5 PERSONS OPTION 1)

DRAWN BY:	AIM	DESIGN BY:	AIM	SCALE:	NTS
CHECKED BY:	CLT	DATE:	SEPT 2022	JOB NO:	254
DRAWING NO:	JOMC/254/SEW/301				

13 September, 2022 - 3:44 PM C:\Users\user\Desktop\MIRUL\254 - agricultural farm labour quarter\ JOMC-254-5 PERSONS OPT1-MAE.dwg